Low-Current Microcontroller for Wireless Communication

The M44C090 and M44C890 are members of Atmels family of 4-bit single-chip microcontrollers. They offer highest integration for IR and RF data communication and remote-control applications. The M44C090 / M44C890 is suitable for the transmitter side. It contains ROM, RAM, parallel I/O ports, one 8-bit programmable multifunction timer/ counter with modulator function, voltage supervisor, interval timer with watchdog function and a sophisticated on-chip clock generation with external clock input, integrated RC-, 32-kHz crystal- and 4-MHz crystal-oscillators. The M44C890 has an additional EEPROM as a second chip in one package.

Features / Benefits

- 2-Kbyte ROM, 256 x 4-bit RAM
- 12 bidirectional I/Os
- Up to 6 external / internal interrupt sources
- Multifunction timer/counter with
  - IR remote control carrier generator
  - Biphase-, Manchester- and pulse-width modulator
- Programmable system-clock with prescaler and five different clock sources
- Wide supply voltage range (1.8 to 6.5 V)
- Very low sleep current (< 1 µA)
- 32 x 16-bit EEPROM (M44C890 only)
- Synchronous serial interface (2-wire, I^2C, 3-wire)
- Watchdog, POR and brown-out function
- Voltage monitoring incl. Lo_BAT detect
- Flash controller T48C893 available (SSO20)

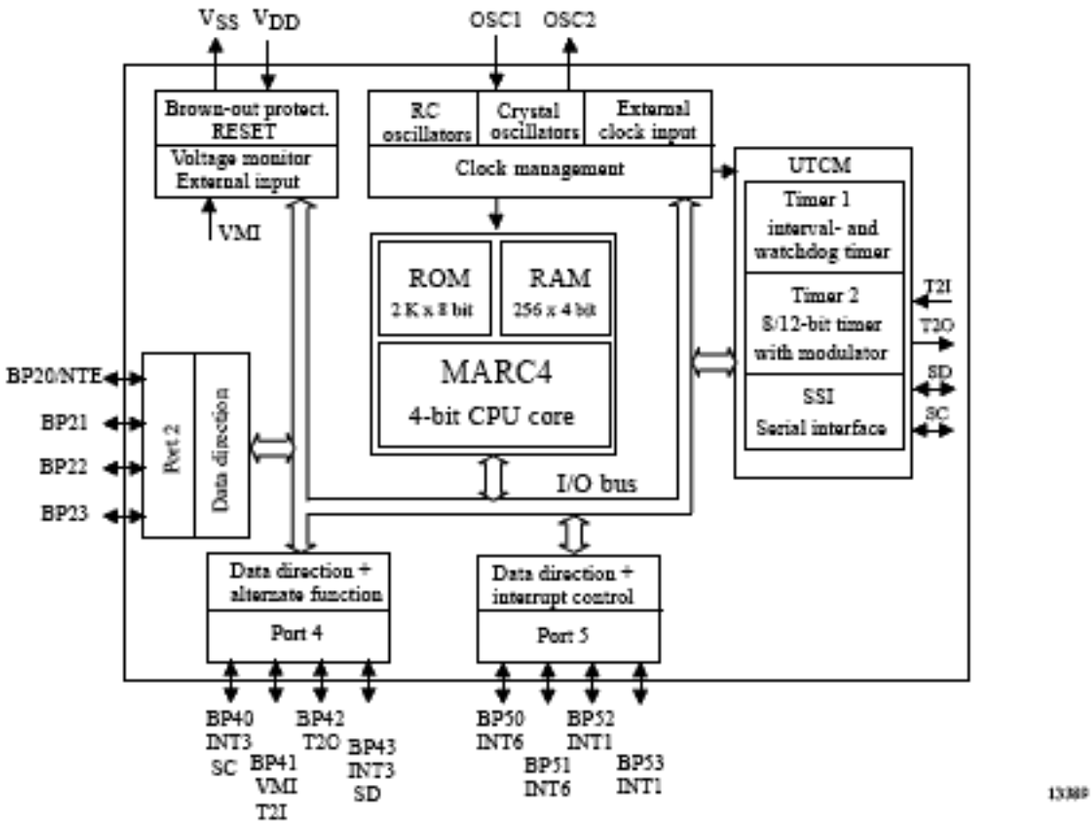

Figure 1. Block diagram M44C090/M44C890

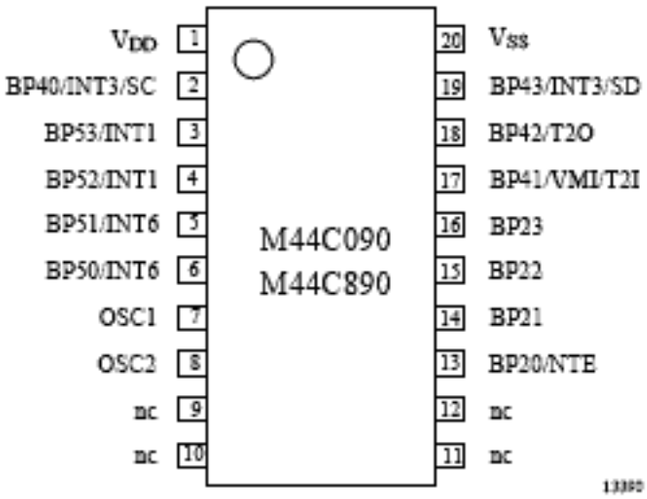

Figure 2. Pinning SSO20 package

Table 1 Pin description

Name	Type	Function	Alternate Function	Pin-No. SSO20	Reset State
V_{DD}		Supply voltage	—	1	NA
V_{SS}		Circuit ground	—	20	NA
nc	—	Not connected	—	10	—
nc	—	Not connected	—	11	—
BP20	I/O	Bidirectional I/O line of Port 2.0	NTE–test mode enable	13	Input
BP21	I/O	Bidirectional I/O line of Port 2.1	—	14	Input
BP22	I/O	Bidirectional I/O line of Port 2.2	—	15	Input
BP23	I/O	Bidirectional I/O line of Port 2.3	—	16	Input
BP40	I/O	Bidirectional I/O line of Port 4.0	SC-serial clock or INT3 external interrupt input	2	Input
BP41	I/O	Bidirectional I/O line of Port 4.1	VMI voltage monitor input or T2I external clock input Timer 2	17	Input
BP42	I/O	Bidirectional I/O line of Port 4.2	T2O Timer 2 output	18	Input
BP43	I/O	Bidirectional I/O line of Port 4.3	SD serial data I/O or INT3–external interrupt input	19	Input
BP50	I/O	Bidirectional I/O line of Port 5.0	INT6 external interrupt input	6	Input
BP51	I/O	Bidirectional I/O line of Port 5.1	INT6 external interrupt input	5	Input
BP52	I/O	Bidirectional I/O line of Port 5.2	INT1 external interrupt input	4	Input
BP53	I/O	Bidirectional I/O line of Port 5.3	INT1 external interrupt input	3	Input
nc	—	Not connected		9	—
nc	—	Not connected		12	—
OSC1	I	Oscillator input	4-MHz crystal input or 32-kHz crystal input or external clock input or external trimming resistor input	7	Input
OSC2	O	Oscillator output	4-MHz crystal output or 32-kHz crystal output	8	NA

Table of Contents

1 Introduction **5**
2 MARC4 Architecture **5**
2.1 General Description 5
2.2 Components of MARC4 Core 6
2.2.1 ROM 6
2.2.2 RAM 6
2.2.3 Registers 7
2.2.4 ALU 9
2.2.5 I/O Bus 9
2.2.6 Instruction Set 9
2.2.7 Interrupt Structure 9
Software Interrupts 11
Hardware Interrupts 11
2.3 Master Reset 11
2.3.1 Power-on Reset and Brown-out Detection 12
2.3.2 Watchdog Reset 13
2.3.3 External Clock Supervisor 13
2.4 Voltage Monitor 13
2.4.1 Voltage Monitor Control / Status Register 14
2.5 Clock Generation 15
2.5.1 Clock Module 15
2.5.2 Oscillator Circuits and External Clock Input Stage 16
RC-Oscillator 1 Fully Integrated 16
External Input Clock 16
RC-Oscillator 2 with External Trimming Resistor 16
4-MHz Oscillator 16
32-kHz Oscillator 17
2.5.3 Clock Management 17
Clock Management Register (CM) 17
System Configuration Register (SC) 18
2.6 Power-down Modes 18
3 Peripheral Modules **19**
3.1 Addressing Peripherals 19
3.2 Bidirectional Ports 20
3.2.1 Bidirectional Port 2 21
Port 2 Data Register (P2DAT) 21
Port 2 Control Register (P2CR) 21
3.2.2 Bidirectional Port 5 22
3.2.3 Bidirectional Port 4 24
3.3 Universal Timer/Counter / Communication Module (UTCM) 25
3.3.1 Timer 1 26
Timer 1 Control Register 1 (T1C1) 27
Timer 1 Control Register 2 (T1C2) 27

Table of Contents (continued)

Watchdog Control Register (WDC) 28
3.3.2 Timer 2 28
Timer 2 Modes 29
Timer 2 Output Modes 30
Timer 2 Output Signals 31
Timer 2 Registers 34
Timer 2 Control Register (T2C) 34
Timer 2 Mode Register 1 (T2M1) 35
Timer 2 Mode Register 2 (T2M2) 36
Timer 2 Compare and Compare Mode Registers 37
Timer 2 Compare Mode Register (T2CM) 37
Timer 2 COmpare Register 1 (T2CO1) 37
Timer 2 COmpare Register 2 (T2CO2) Byte Write 37
3.3.3 Synchronous Serial Interface (SSI) 38
SSI Peripheral Configuration 38
General SSI Operation 38
8-bit Synchronous Mode 39
9-bit Shift Mode (I2C compatible) 41
8-bit Pseudo I2C Mode 42
I2C Bus Protocol 42
SSI Interrupt 43
Modulation 43
Internal 2-Wire Multi-Chip Link 44
Serial Interface Registers 45
Serial Interface Control Register 1 (SIC1) 45
Serial Interface Control Register 2 (SIC2) 45
Serial Interface Status and Control Register (SISC) 46
Serial Transmit Buffer (STB) – Byte Write 46
Serial Receive Buffer (SRB) – Byte Read 47
3.3.4 Combination Modes 47
Combination Mode Timer 2 and SSI 47
4 M44C890 50
4.1 U505M EEPROM 50
4.1.1 Serial Interface 51
Serial Protocol 51
4.1.2 EEPROM 52
EEPROM – Operating Modes 52
Write Operations 52
Read Operations 53
Initialization after a Reset Condition 53
5 Electrical Characteristics 54
5.1 Absolute Maximum Ratings 54
5.2 DC Operating Characteristics 54
5.3 AC Characteristics 56
6 Package Information 61
7 Ordering Information 62

1 Introduction

The M44C090 / M44C890 are members of Atmels family of 4-bit single-chip microcontrollers. They contain ROM, RAM, parallel I/O ports, one 8-bit programmable multi-function timer/counter, voltage supervisor, interval timer with watchdog function and a sophisticated on-chip clock generation with integrated RC-, 32-kHz crystal- and 4-MHz crystal-oscillators.

Table 2 provides an overview of the available variants.

Table 2 Available variants of M4xCx9x

Version	Type	ROM	E2PROM peripheral	Packages
Flash device	T48C893	4 Kbyte EEPROM	64 byte	SSO20
Production	M44C090	2 Kbyte mask ROM	—	SSO20
Production	M44C890	2 Kbyte mask ROM	64 byte	SSO20

2 MARC4 Architecture

2.1 General Description

The MARC4 microcontroller consists of an advanced stack-based, 4-bit CPU core and on-chip peripherals. The CPU is based on the HARVARD architecture with physically separate program memory (ROM) and data memory (RAM). Three independent buses, the instruction bus, the memory bus and the I/O bus, are used for parallel communication between ROM, RAM and peripherals. This enhances program execution speed by allowing both instruction prefetching, and a simultaneous communication to the on-chip peripheral circuitry. The extremely powerful integrated interrupt controller with associated eight prioritized interrupt levels supports fast and efficient processing of hardware events. The MARC4 is designed for the high-level programming language qFORTH. The core includes both, an expression and a return stack. This architecture enables high-level language programming without any loss of efficiency or code density.

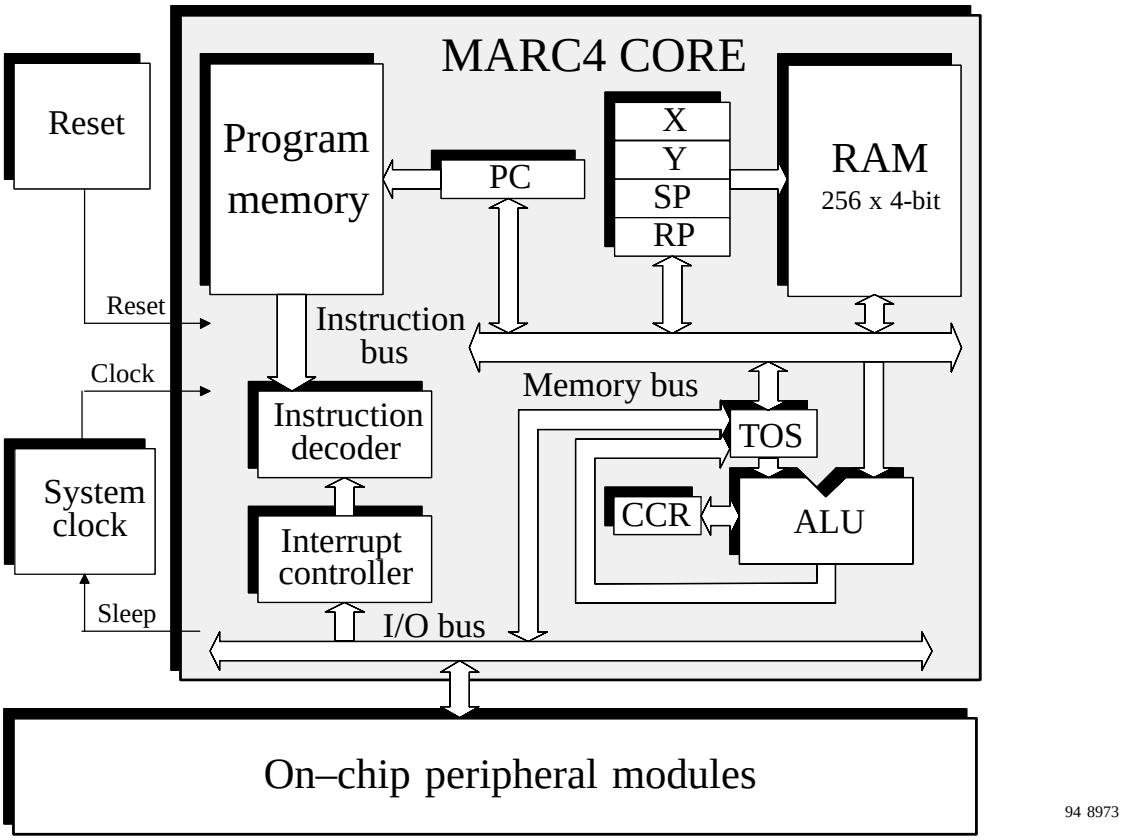

Figure 3. MARC4 core

2.2 Components of MARC4 Core

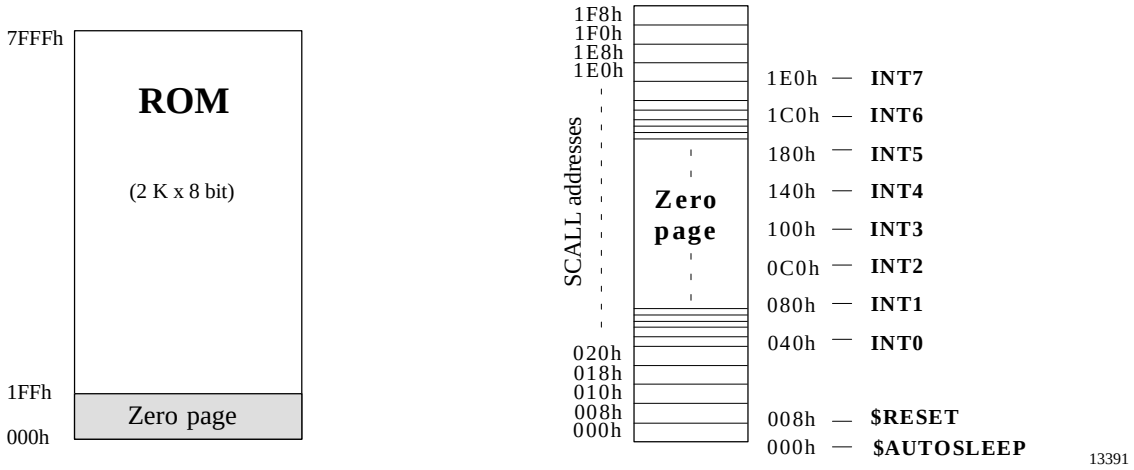

Figure 4. ROM map of M44C090

The core contains ROM, RAM, ALU, program counter, RAM address registers, instruction decoder and interrupt controller. The following sections describe each functional block in more detail:

2.2.1 ROM

The program memory (ROM) is mask programmed with the customer application program during the fabrication of the microcontroller. The ROM is addressed by a 12–bit wide program counter, thus predefining a maximum program bank size of 2 Kbytes. An additional 1 Kbyte of ROM exists which is reserved for quality control self–test software The lowest user ROM address segment is taken up by a 512 byte zero page which contains predefined start addresses for interrupt service routines and special subroutines accessible with single byte instructions (SCALL).

The corresponding memory map is shown in figure 4. Look-up tables of constants can also be held in ROM and are accessed via the MARC4's built-in TABLE instruction.

2.2.2 RAM

The M44C090 / M44C890 contains 256 x 4-bit wide static random access memory (RAM). It is used for the expression stack, the return stack and data memory for variables and arrays. The RAM is addressed by any of the four 8-bit wide RAM address registers SP, RP, X and Y.

Expression Stack

The 4-bit wide expression stack is addressed with the expression stack pointer (SP). All arithmetic, I/O and memory reference operations take their operands from, and return their results to the expression stack. The MARC4 performs the operations with the top of stack items (TOS and TOS–1). The TOS register contains the top element of the expression stack and works in the same way as an accumulator. This stack is also used for passing parameters between subroutines and as a scratch pad area for temporary storage of data.

Return Stack

The 12-bit wide return stack is addressed by the return stack pointer (RP). It is used for storing return addresses of subroutines, interrupt routines and for keeping loop index counts. The return stack can also be used as a temporary storage area.

The MARC4 instruction set supports the exchange of data between the top elements of the expression stack and the return stack. The two stacks within the RAM have a user definable location and maximum depth.

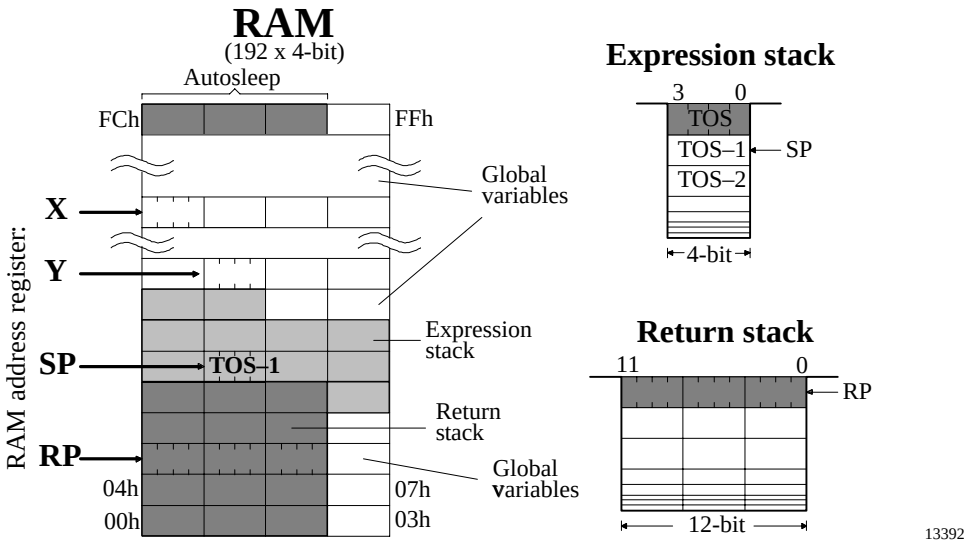

Figure 5. RAM map

2.2.3 Registers

The MARC4 controller has seven programmable registers and one condition code register. They are shown in the following programming model.

Program Counter (PC)

The program counter (PC) is a 12-bit register which contains the address of the next instruction to be fetched from the ROM. Instructions currently being executed are decoded in the instruction decoder to determine the internal micro-operations. For linear code (no calls or branches) the program counter is incremented with every instruction cycle. If a branch-, call-, return-instruction or an interrupt is executed, the program counter is loaded with a new address. The program counter is also used with the TABLE instruction to fetch 8-bit wide ROM constants.

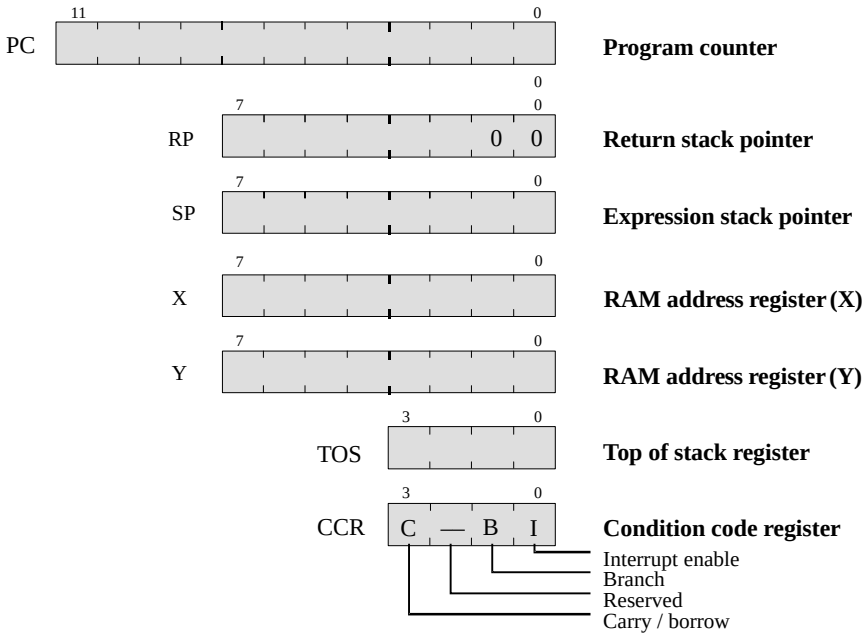

Figure 6. Programming model

RAM Address Registers

The RAM is addressed with the four 8-bit wide RAM address registers: SP, RP, X and Y. These registers allow access to any of the 256 RAM nibbles.

Expression Stack Pointer (SP)

The stack pointer (SP) contains the address of the next-to-top 4-bit item (TOS–1) of the expression stack. The pointer is automatically pre-incremented if a nibble is moved onto the stack or post-decremented if a nibble is removed from the stack. Every post-decrement operation moves the item (TOS–1) to the TOS register before the SP is decremented. After a reset the stack pointer has to be initialized with ” >SP S0 ” to allocate the start address of the expression stack area.

Return Stack Pointer (RP)

The return stack pointer points to the top element of the 12-bit wide return stack. The pointer automatically pre-increments if an element is moved onto the stack, or it post-decrements if an element is removed from the stack. The return stack pointer increments and decrements in steps of 4. This means that every time a 12-bit element is stacked, a 4-bit RAM location is left unwritten. This location is used by the qFORTH compiler to allocate 4-bit variables. After a reset the return stack pointer has to be initialized via ”>RP FCh ”.

RAM Address Registers (X and Y)

The X and Y registers are used to address any 4-bit item in the RAM. A fetch operation moves the addressed nibble onto the TOS. A store operation moves the TOS to the addressed RAM location. By using either the pre–increment or post–decrement addressing mode arrays in the RAM can be compared, filled or moved.

Top Of Stack (TOS)

The top of stack register is the accumulator of the MARC4. All arithmetic/logic, memory reference and I/O operations use this register. The TOS register receives data from the ALU, ROM, RAM or I/O bus.

Condition Code Register (CCR)

The 4-bit wide condition code register contains the branch, the carry and the interrupt enable flag. These bits indicate the current state of the CPU. The CCR flags are set or reset by ALU operations. The instructions SET_BCF, TOG_BF, CCR! and DI allow direct manipulation of the condition code register.

Carry/Borrow (C)

The carry/borrow flag indicates that the borrowing or carrying out of arithmetic logic unit (ALU) occurred during the last arithmetic operation. During shift and rotate operations, this bit is used as a fifth bit. Boolean operations have no affect on the C-flag.

Branch (B)

The branch flag controls the conditional program branching. Should the branch flag have been set by a previous instruction a conditional branch will cause a jump. This flag is affected by arithmetic, logic, shift, and rotate operations.

Interrupt Enable (I)

The interrupt enable flag globally enables or disables the triggering of all interrupt routines with the exception of the non-maskable reset. After a reset or on executing the DI instruction, the interrupt enable flag is reset thus disabling all interrupts. The core will not accept any further interrupt requests until the interrupt enable flag has been set again by either executing an EI, RTI or SLEEP instruction.

2.2.4 ALU

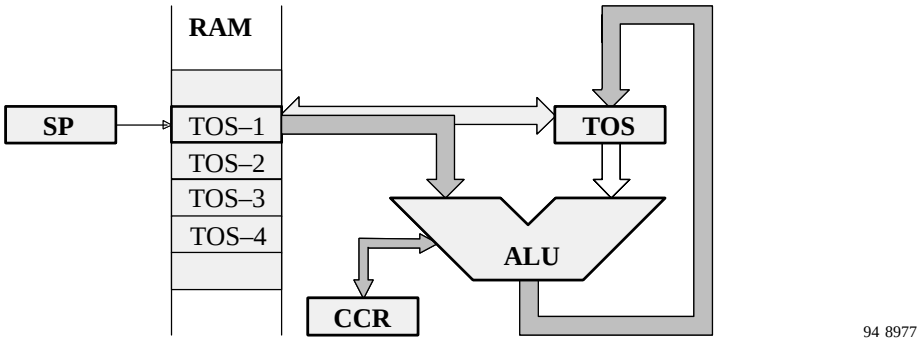

Figure 7. ALU zero-address operations

The 4-bit ALU performs all the arithmetic, logical, shift and rotate operations with the top two elements of the expression stack (TOS and TOS–1) and returns the result to the TOS. The ALU operations affect the carry/borrow and branch flag in the condition code register (CCR).

2.2.5 I/O Bus

The I/O ports and the registers of the peripheral modules are I/O mapped. All communication between the core and the on-chip peripherals takes place via the I/O bus and the associated I/O control. With the MARC4 IN and OUT instructions the I/O bus allows a direct read or write access to one of the 16 primary I/O addresses. More about the I/O access to the on-chip peripherals is described in the section ”Peripheral Modules”. The I/O bus is internal and is not accessible by the customer on the final micro-controller device, but it is used as the interface for the MARC4 emulation (see also the section ”Emulation”).

2.2.6 Instruction Set

The MARC4 instruction set is optimized for the high level programming language qFORTH. Many MARC4 instructions are qFORTH words. This enables the compiler to generate a fast and compact program code. The CPU has an instruction pipeline allowing the controller to prefetch an instruction from ROM at the same time as the present instruction is being executed. The MARC4 is a zero address machine, the instructions containing only the operation to be performed and no source or destination address fields. The operations are implicitly performed on the data placed on the stack. There are one and two byte instructions which are executed within 1 to 4 machine cycles. A MARC4 machine cycle is made up of two system clock cycles (SYSCL). Most of the instructions are only one byte long and are executed in a single machine cycle. For more information refer to the ”MARC4 Programmer’s Guide”.

2.2.7 Interrupt Structure

The MARC4 can handle interrupts with eight different priority levels. They can be generated from the internal and external interrupt sources or by a software interrupt from the CPU itself. Each interrupt level has a hard-wired priority and an associated vector for the service routine in the ROM (see table 2). The programmer can postpone the processing of interrupts by resetting the interrupt enable flag (I) in the CCR. An interrupt occurrence will still be registered, but the interrupt routine only started after the I flag is set. All interrupts can be masked, and the priority individually software configured by programming the appropriate control register of the interrupting module. (see section ”Peripheral Modules”).

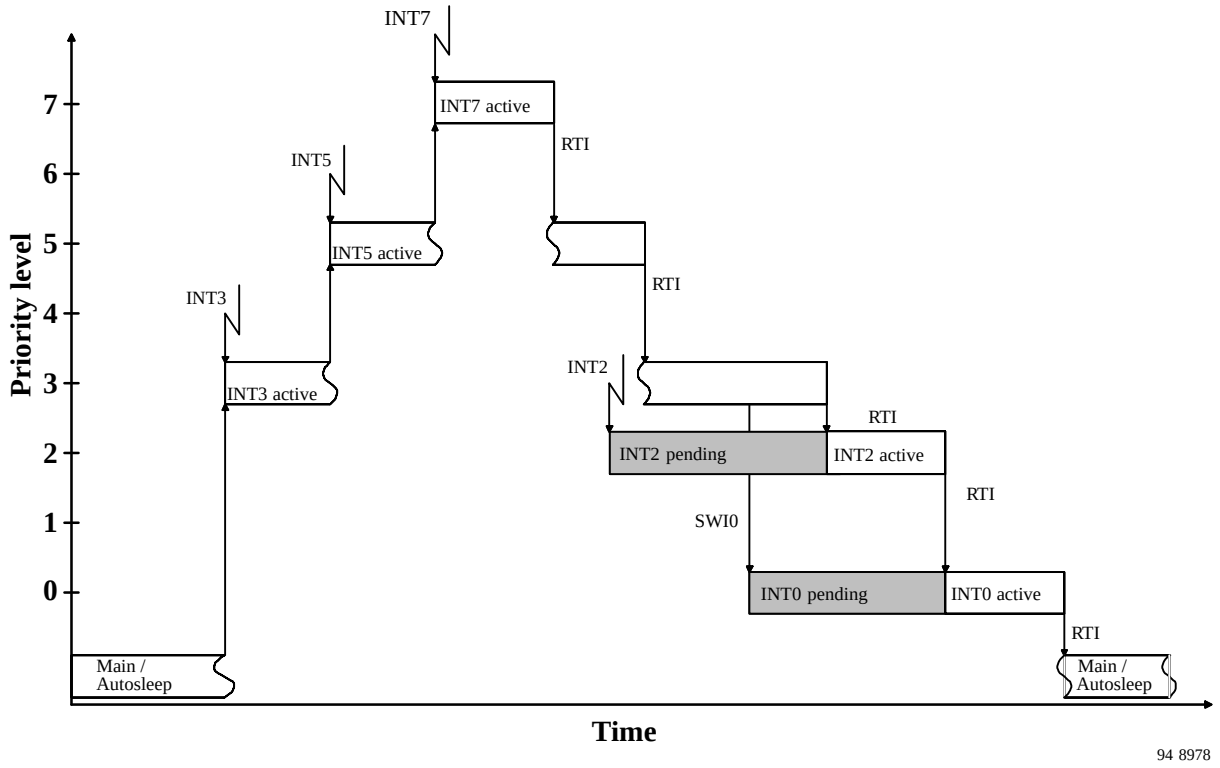

Figure 8. Interrupt handling

Interrupt Processing

For processing the eight interrupt levels, the MARC4 includes an interrupt controller with two 8-bit wide ”interrupt pending” and ”interrupt active” registers. The interrupt controller samples all interrupt requests during every non-I/O instruction cycle and latches these in the interrupt pending register. If no higher priority interrupt is present in the interrupt active register, it signals the CPU to interrupt the current program execution. If the interrupt enable bit is set, the processor enters an interrupt acknowledge cycle. During this cycle a short call (SCALL) instruction to the service routine is executed and the current PC is saved on the return stack. An interrupt service routine is completed with the RTI instruction. This instruction sets the interrupt enable flag, resets the corresponding bits in the interrupt pending/active register and fetches the return address from the return stack to the program counter. When the interrupt enable flag is reset (triggering of interrupt routines are disabled), the execution of new interrupt service routines is inhibited but not the logging of the interrupt requests in the interrupt pending register. The execution of the interrupt is delayed until the interrupt enable flag is set again. Note that interrupts are only lost if an interrupt request occurs while the corresponding bit in the pending register is still set (i.e., the interrupt service routine is not yet finished).

It should also be noted that automatic stacking of the RBR is not carried out by the hardware and so if ROM banking is used, the RBR must be stacked on the expression stack by the application program and restored before the RTI. After a master reset (power-on, brown-out or watchdog reset), the interrupt enable flag and the interrupt pending and interrupt active register are all reset.

Interrupt Latency

The interrupt latency is the time from the occurrence of the interrupt to the interrupt service routine being activated. In MARC4 this is extremely short (taking between 3 to 5 machine cycles depending on the state of the core).

Table 3 Interrupt priority table

Interrupt	Priority	ROM Address	Interrupt Opcode	Function
INT0	lowest	040h	C8h (SCALL 040h)	Software interrupt (SWI0)
INT1	|	080h	D0h (SCALL 080h)	External hardware interrupt, any edge at BP52 or BP53
INT2	|	0C0h	D8h (SCALL 0C0h)	Timer 1 interrupt
INT3	|	100h	E8h (SCALL 100h)	SSI interrupt or external hardware interrupt at BP40 or BP43
INT4	|	140h	E8h (SCALL 140h)	Timer 2 interrupt
INT5	|	180h	F0h (SCALL 180h)	Software interrupt (SW15)
INT6	↓	1C0h	F8h (SCALL 1C0h)	External hardware interrupt, at any edge at BP50 or BP51
INT7	highest	1E0h	FCh (SCALL 1E0h)	Voltage monitor (VM) interrupt

Table 4 Hardware interrupts

Interrupt	Interrupt Mask		Interrupt Source
	Register	Bit	
INT1	P5CR	P52M1, P52M2 P53M1, P53M2	Any edge at BP52 any edge at BP53
INT2	T1M	T1IM	Timer 1
INT3	SISC	SIM	SSI buffer full / empty or BP40/BP43 interrupt
INT4	T2CM	T2IM	Timer 2 compare match / overflow
INT6	P5CR	P50M1, P50M2 P51M1, P51M2	Any edge at BP50, any edge at BP51
INT7	VCM	VIM	External / internal voltage monitoring

Software Interrupts

The programmer can generate interrupts by using the software interrupt instruction (SWI) which is supported in qFORTH by predefined macros named SWI0...SWI7. The software triggered interrupt operates exactly like any hardware triggered interrupt. The SWI instruction takes the top two elements from the expression stack and writes the corresponding bits via the I/O bus to the interrupt pending register. Therefore, by using the SWI instruction, interrupts can be re-prioritized or lower priority processes scheduled for later execution.

Hardware Interrupts

In the M44C090, there are eleven hardware interrupt sources with seven different levels. Each source can be masked individually by mask bits in the corresponding control registers. An overview of the possible hardware configurations is shown in table 4.

2.3 Master Reset

The master reset forces the CPU into a well-defined condition. It is unmaskable and is activated independent of the current program state. It can be triggered by either initial supply power-up, a short collapse of the power supply, brown-out detection circuitry, watchdog time-out, or an external input clock supervisor stage (see figure 9). A master reset activation will reset the interrupt enable flag, the interrupt pending register and the interrupt active register. During the power-on reset phase the I/O bus control signals are set to 'reset mode' thereby initializing all on-chip peripherals. All bidirectional ports are set to input mode. Attention: During any reset phase, the BP20/NTE input is driven towards V_{DD} by a strong pull-up transistor.

Releasing the reset results in a short call instruction (opcode C1h) to the ROM address 008h. This activates the initialization routine $RESET which in turn has to initialize all necessary RAM variables, stack pointers and peripheral configuration registers (see table 7).

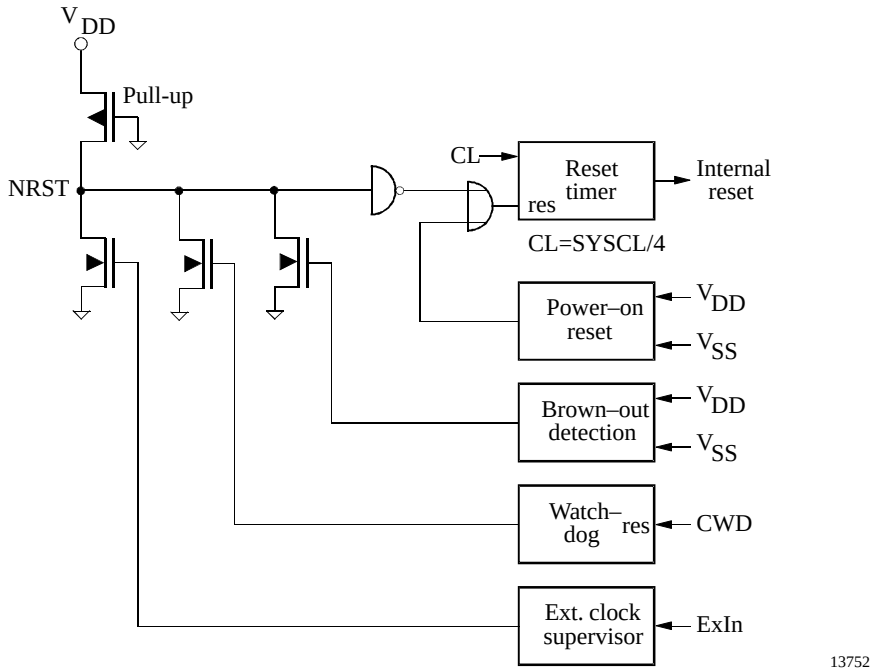

Figure 9. Reset configuration

2.3.1 Power-on Reset and Brown-out Detection

The M44C090 / M44C890 has a fully integrated power-on reset and brown-out detection circuitry. For reset generation no external components are needed .

These circuits ensure that the core is held in the reset state until the minimum operating supply voltage has been reached. A reset condition will also be generated should the supply voltage drop momentarily below the minimum operating level except when a power down mode is activated (the core is in SLEEP mode and the peripheral clock is stopped). In this power-down mode the brown-out detection is disabled.

Two values for the brown-out voltage threshold are programmable via the BOT-bit in the SC-register.

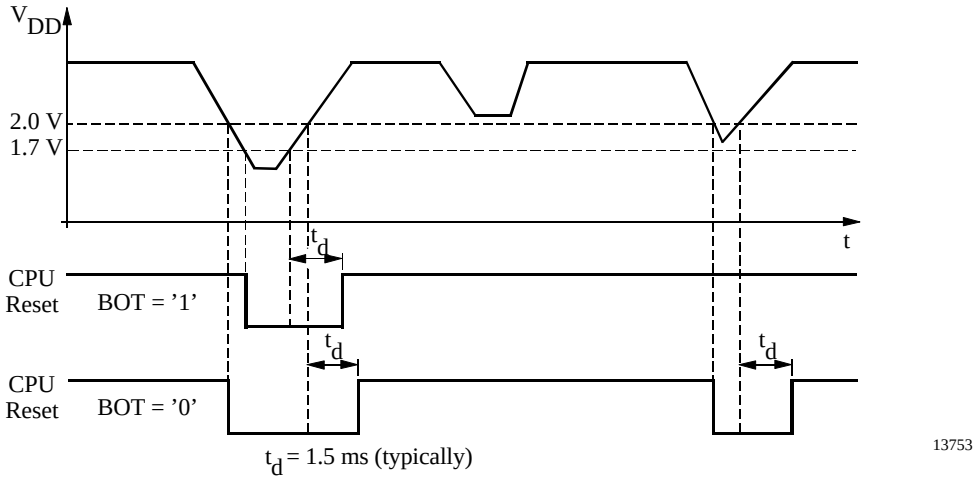

BOT = 1, low brown-out voltage threshold. (1.7 V) is reset value.
BOT = 0, high brown-out voltage threshold (1.9 V).

Figure 10. Brown-out detection

A power-on reset pulse is generated by a V_{DD} rise across the default BOT voltage level (1.7 V). A brown-out reset pulse is generated when V_{DD} falls below the brown-out voltage threshold. Two values for the brown-out voltage threshold are programmable via the BOT-bit in the SC-register. When the controller runs in the upper supply voltage range with a high system clock frequency, the high threshold must be used. When it runs with a lower system clock frequency, the low threshold and a wider supply voltage range may be chosen. For further details, see the electrical specification and the SC-register description for BOT programming.

2.3.2 Watchdog Reset

The watchdog's function can be enabled at the WDC-register and triggers a reset with every watchdog counter overflow. To supress the watchdog reset, the watchdog counter must be regularly reset by reading the watchdog register address (CWD).

The CPU reacts in exactly the same manner as a reset stimulus from any of the above sources.

2.3.3 External Clock Supervisor

The external input clock supervisor function can be enabled if the external input clock is selected within the CM- and SC-registers of the clock module.

The CPU reacts in exactly the same manner as a reset stimulus from any of the above sources.

2.4 Voltage Monitor

The voltage monitor consists of a comparator with internal voltage reference. It is used to supervise the supply voltage or an external voltage at the VMI-pin. The comparator for the supply voltage has three internal programmable thresholds one lower threshold (2.2 V), one middle threshold (2.6 V). and one higher threshold (3.0 V). For external voltages at the VMI-pin, the comparator threshold is set to V_{BG} = 1.3 V. The VMS-bit indicates if the supervised voltage is below (VMS = 0) or above (VMS = 1) this threshold. An interrupt can be generated when the VMS-bit is set or reset to detect a rising or falling slope. A voltage monitor interrupt (INT7) is enabled when the interrupt mask bit (VIM) is reset in the VMC-register.

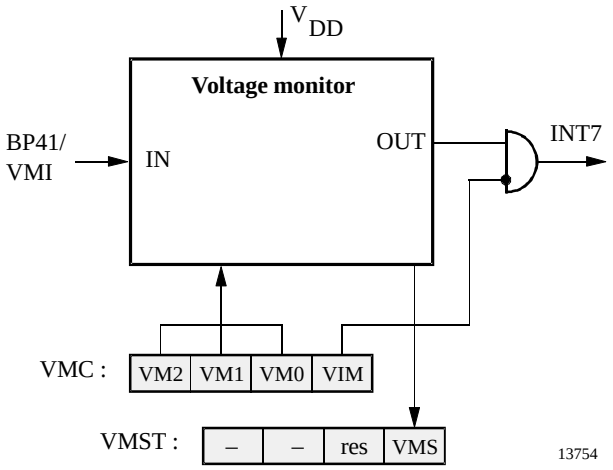

Figure 11. Voltage monitor

2.4.1 Voltage Monitor Control / Status Register

Primary register address: ’F’hex

	Bit 3	Bit 2	Bit 1	Bit 0	
VMC: Write	**VM2**	**VM1**	**VM0**	**VIM**	**Reset value: 1111b**
VMST: Read	**—**	**—**	**reserved**	**VMS**	**Reset value: xx11b**

VM2: **V**oltage monitor **M**ode bit 2

VM1: **V**oltage monitor **M**ode bit 1

VM0: **V**oltage monitor **M**ode bit 0

VM2	VM1	VM0	Function
1	1	1	Disable voltage monitor
1	1	0	External (VIM-input), internal reference threshold (1.3 V), interrupt with negative slope
1	0	1	Not allowed
1	0	0	External (VMI-input), internal reference threshold (1.3 V), interrupt with positive slope
0	1	1	Internal (supply voltage), high threshold (3.0 V), interrupt with negative slope
0	1	0	Internal (supply voltage), middle threshold (2.6 V), interrupt with negative slope
0	0	1	Internal (supply voltage), low threshold (2.2 V), interrupt with negative slope
0	0	0	Not allowed

VIM **V**oltage **I**nterrupt **M**ask bit

VIM = 0, voltage monitor interrupt is enabled
VIM = 1, voltage monitor interrupt is disabled

VMS **V**oltage **M**onitor **S**tatus bit

VMS = 0, the voltage at the comparator input is below Vref
VMS = 1, the voltage at the comparator input is above Vref

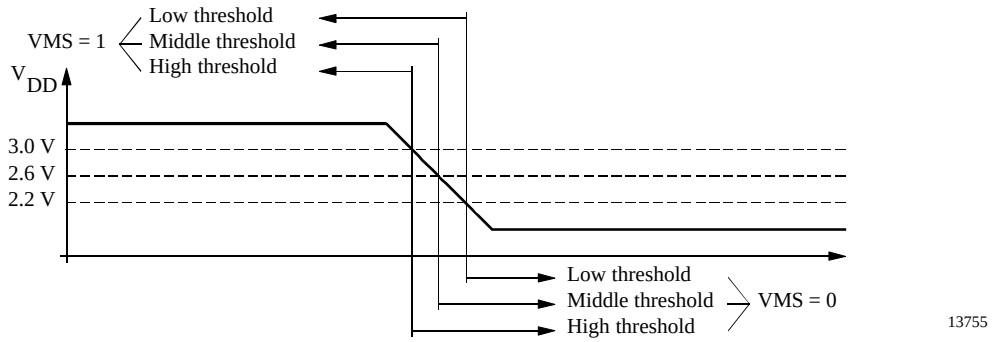

Figure 12. Internal supply voltage supervisor

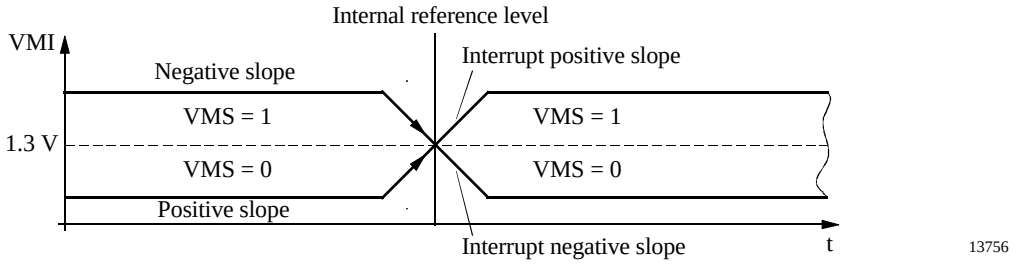

Figure 13. External input voltage supervisor

2.5 Clock Generation

2.5.1 Clock Module

The M44C090 / M44C890 contains a clock module with 4 different internal oscillator types: two RC-oscillators, one 4-MHz crystal oscillator and one 32-kHz crystal oscillator. The pins OSC1 and OSC2 are the interface to connect a crystal either to the 4-MHz, or to the 32-kHz crystal oscillator. OSC1 can be used as input for external clocks or to connect an external trimming resistor for the RC-oscillator 2. All necessary circuitry except the crystal and the trimming resistor is integrated on-chip. One of these oscillator types or an external input clock can be selected to generate the system clock (SYSCL).

In applications that do not require exact timing, it is possible to use the fully integrated RC-oscillator 1 without any external components. The RC-oscillator 1 center frequency tolerance is better than ± 50%. The RC-oscillator 2 is a trimmable oscillator whereby the oscillator frequency can be trimmed with an external resistor attached between OSC1 and V_{DD}. In this configuration, the RC-oscillator 2 frequency can be maintained stable to within a tolerance of ± 15% over the full operating temperature and voltage range.

The clock module is programmable via software with the clock management register (CM) and the system configuration register (SC). The required oscillator configuration can be selected with the OS1-bit and the OS0-bit in the SC-register. A programmable 4-bit divider stage allows the adjustment of the system clock speed. A special feature of the clock management is that an external oscillator may be used and switched on and off via a port pin for the power-down mode. Before the external clock is switched off, the internal RC-oscillator 1 must be selected with the CCS-bit and then the SLEEP mode may be activated. In this state an interrupt can wake up the controller with the RC-oscillator, and the external oscillator can be activated and selected by software. A synchronization stage avoids too short clock periods if the clock source or the clock speed is changed. If an external input clock is selected, a supervisor circuit monitors the external input and generates a hardware reset if the external clock source fails or drops below 500 kHz for more than 1 msec.

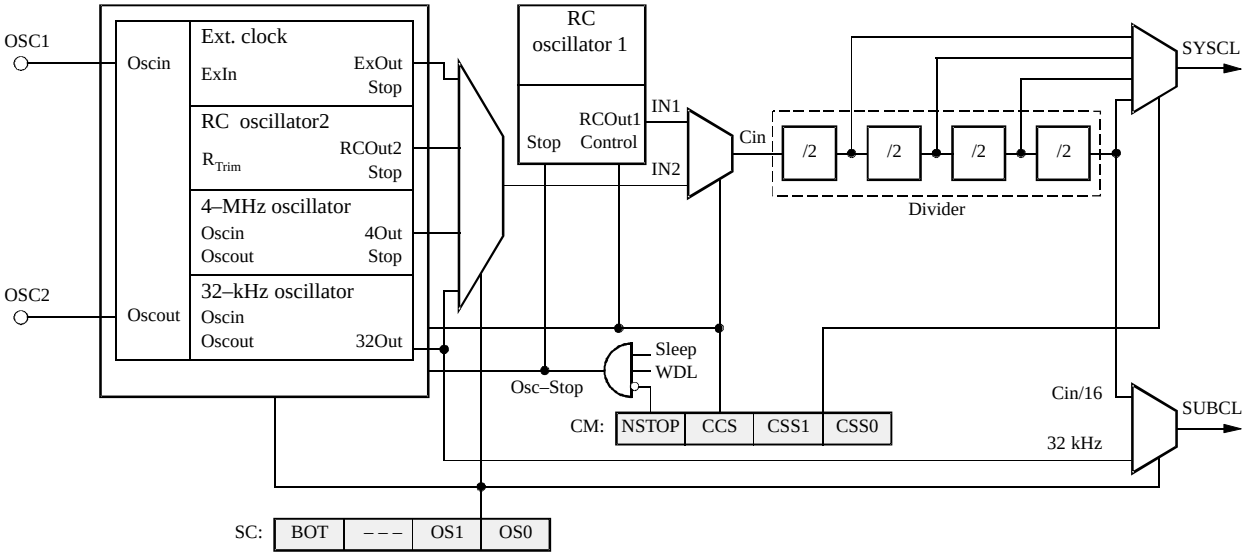

Figure 14. Clock module

Table 5 Clock modes

Mode			Clock Source for SYSCL		Clock Source for SUBCL
	OS1	OS0	CCS = 1	CCS = 0	
1	1	1	RC-oscillator 1 (intern)	External input clock	C_{in} / 16
2	0	1	RC-oscillator 1 (intern)	RC-oscillator 2 with external trimming resistor	C_{in} / 16
3	1	0	RC-oscillator 1 (intern)	4-MHz oscillator	C_{in} / 16
4	0	0	RC-oscillator 1 (intern)	32-kHz oscillator	32 kHz

The clock module generates two output clocks. One is the system clock (SYSCL) and the other the periphery (SUBCL). The SYSCL can supply the core and the peripherals and the SUBCL can supply only the peripherals with clocks. The modes for clock sources are programmable with the OS1-bit and OS0-bit in the SC-register and the CCS-bit in the CM-register.

2.5.2 Oscillator Circuits and External Clock Input Stage

The M44C090 / M44C890 series consists of four different internal oscillators: two RC-oscillators, one 4-MHz crystal oscillator, one 32-kHz crystal oscillator and one external clock input stage.

RC-Oscillator 1 Fully Integrated

For timing insensitive applications, it is possible to use the fully integrated RC oscillator 1. It operates without any external components and saves additional costs. The RC–oscillator 1 center frequency tolerance is better than ±50% over the full temperature and voltage range. The basic center frequency of the RC-oscillator 1 is $f_O \approx 3.8$ MHz The RC oscillator 1 is selected by default after power–on reset.

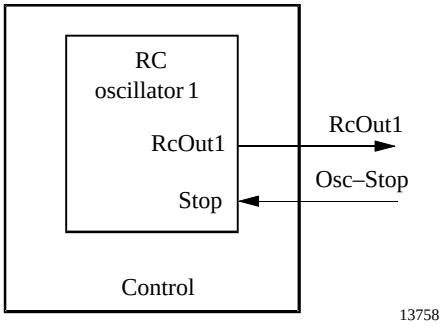

Figure 15. RC-oscillator 1

External Input Clock

The OSC1 can be driven by an external clock source provided it meets the specified duty cycle, rise and fall times and input levels. Additionally the external clock stage contains a supervisory circuit for the input clock. The supervisor function is controlled via the OS1, OS0-bit in the SC–register and the CCS–bit in the CM-register. If the external input clock fails and CCS = 0 is set in the CM-register, the supervisory circuit generates a hardware reset. The input clock has failed if the frequency is less than 500 kHz for more than 1 ms.

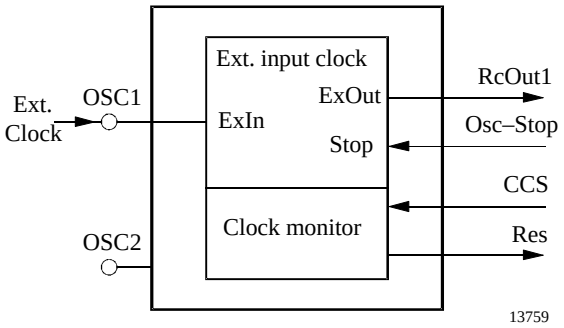

Figure 16. External input clock

OS1	OS0	CCS	Supervisor Reset Output (Res)
1	1	0	enable
1	1	1	disable
x	0	x	disable

RC-Oscillator 2 with External Trimming Resistor

The RC-oscillator 2 is a high resolution trimmable oscillator whereby the oscillator frequency can be trimmed with an external resistor between OSC1 and V_{DD}. In this configuration, the RC-oscillator 2 frequency can be maintained stable to within a tolerance of ± 10% over the full operating temperature and, voltage range from V_{DD} = 2.5 V to 6V.

For example: An output frequency at the RC-oscillator 2 of 2 MHz, can be obtained by connecting a resistor R_{ext} = 360 kΩ (see figure 17).

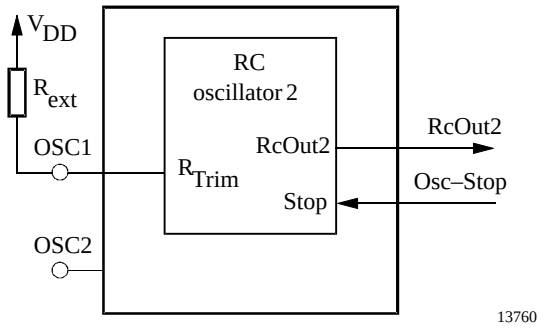

Figure 17. RC-oscillator 2

4-MHz Oscillator

The M44C090 / M44C890 4-MHz oscillator options need a crystal or ceramic resonator connected to the OSC1 and OSC2 pins to establish oscillation. All the necessary oscillator circuitry, with the exception of the actual crystal, resonator, C3 and C4 are integrated on-chip.

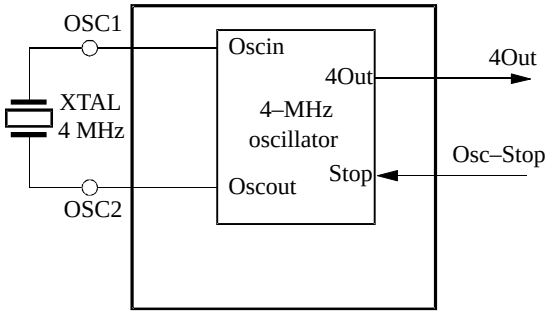

Figure 18. 4-MHz crystal oscillator

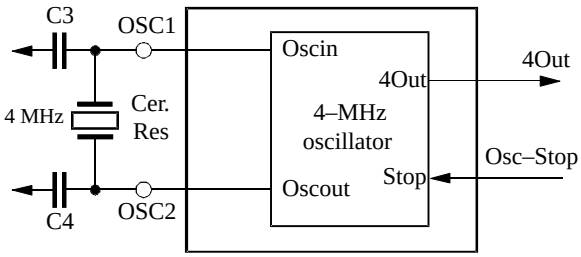

C2 = C3 = 22 pF

Figure 19. Ceramic resonator

32-kHz Oscillator

Some applications require long-term time keeping or low resolution timing. In this case, an on–chip, low power 32-kHz crystal oscillator can be used to generate both the SUBCL and the SYSCL. In this mode, power consumption is greatly reduced. The 32-kHz crystal oscillator can not be stopped while the power-down mode is in operation.

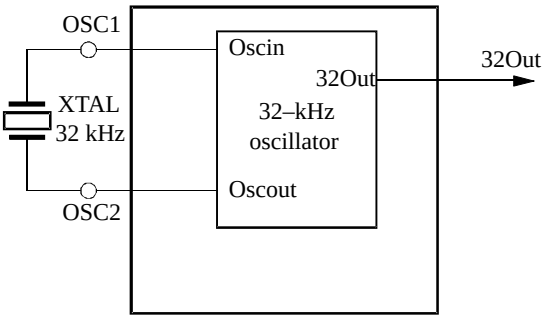

Figure 20. 32-kHz crystal oscillator

2.5.3 Clock Management

The clock management register controls the system clock divider and synchronization stage. Writing to this register triggers the synchronization cycle.

Clock Management Register (CM)

Auxiliary register address: ’3’hex

	Bit 3	Bit 2	Bit 1	Bit 0
CM:	**NSTOP**	**CCS**	**CSS1**	**CSS0**

Reset value: 1111b

NSTOP **N**ot **STOP** peripheral clock
NSTOP = 0, stops the peripheral clock while the core is in SLEEP mode
NSTOP = 1, enables the peripheral clock while the core is in SLEEP mode

CCS **C**ore **C**lock **S**elect
CCS = 1, the internal RC-oscillator 1 generates SYSCL
CCS = 0, the 4-MHz crystal oscillator, the 32-kHz crystal oscillator, an external clock source or the internal RC-oscillator 2 with the external resistor at OSC1 generates SYSCL dependent on the setting of OS0 and OS1 in the system configuration register

CSS1 **C**ore **S**peed **S**elect **1**

CSS0 **C**ore **S**peed **S**elect **0**

CSS1	CSS0	Divider	Note
0	0	16	
1	1	8	Reset value
1	0	4	
0	1	2	

System Configuration Register (SC)

Primary register address: ’3’hex

	Bit 3	Bit 2	Bit 1	Bit 0	
SC: write	**BOT**	**—**	**OS1**	**OS0**	**Reset value: 1x11b**

BOT **B**rown-**O**ut **T**hreshold
BOT = 1, low brown-out voltage threshold (1.7 V)
BOT = 0, high brown-out voltage threshold (2.0 V)

OS1 **O**scillator **S**elect **1**

OS0 **O**scillator **S**elect **0**

Mode	OS1	OS0	Input for SUBCL	Selected Oscillators
1	1	1	C_{in} / 16	RC–oscillator 1 and external input clock
2	0	1	C_{in} / 16	RC-oscillator 1 and RC-oscillator 2
3	1	0	C_{in} / 16	RC-oscillator 1 and 4-MHz crystal oscillator
4	0	0	32 kHz	RC-oscillator 1 and 32-kHz crystal oscillator

If the bit CCS = 0 in the CM-register the RC-oscillator 1 always stops.

2.6 Power-down Modes

The sleep mode is a shut-down condition which is used to reduce the average system power consumption in applications where the µC is not fully utilized. In this mode, the system clock is stopped. The sleep mode is entered via the SLEEP instruction. This instruction sets the interrupt enable bit (I) in the condition code register to enable all interrupts and stops the core. During the sleep mode the peripheral modules remain active and are able to generate interrupts. The µC exits the sleep mode by carrying out any interrupt or a reset.

The sleep mode can only be kept when none of the interrupt pending or active register bits are set. The application of the $AUTOSLEEP routine ensures the correct function of the sleep mode. For standard applications use the $AUTOSLEEP routine to enter the power-down mode. Using the SLEEP instruction instead of the $AUTOSLEEP following an I/O instruction requires to insert 3 non I/O instruction cycles (for example NOP NOP NOP) between the IN or OUT command and the SLEEP command.

The total power consumption is directly proportional to the active time of the µC. For a rough estimation of the expected average system current consumption, the following formula should be used:

$$I_{total}\,(V_{DD}, f_{syscl}) = I_{Sleep} + (I_{DD} \times t_{active} / t_{total})$$

I_{DD} depends on V_{DD} and f_{syscl}.

The M44C090 / M44C890 has various power-down modes. During the sleep mode the clock for the MARC4 core is stopped. With the NSTOP-bit in the clock management register (CM) it is programmable if the clock for the on–chip peripherals is active or stopped during the sleep mode. If the clock for the core and the peripherals is stopped the selected oscillator is switched off. An exception is the 32-kHz oscillator, if it is selected it runs continously independent of the NSTOP-bit. If the oscillator is stopped or the 32 kHz oscillator is selected, power consumption is extremely low.

Table 6 Power-down modes

Mode	CPU Core	Osc-Stop*	Brown-out Function	RC-Oscillator 1 RC-Oscillator 2 4-MHz Oscillator	32-kHz Oscillator	External Input Clock
Active	RUN	NO	Active	RUN	RUN	YES
Power-down	SLEEP	NO	Active	RUN	RUN	YES
SLEEP	SLEEP	YES	STOP	STOP	RUN	STOP

* Osc-Stop = SLEEP & NSTOP & WDL

3 Peripheral Modules

3.1 Addressing Peripherals

Accessing the peripheral modules takes place via the I/O bus (see figure 21). The IN or OUT instructions allow direct addressing of up to 16 I/O modules. A dual register addressing scheme has been adopted to enable direct addressing of the ”primary register”. To address the ”auxiliary register”, the access must be switched with an ”auxiliary switching module”. Thus a single IN (or OUT) to the module address will read (or write) into the module primary register. Accessing the auxiliary register is performed with the same instruction preceded by writing the module address into the auxiliary switching module. Byte wide registers are accessed by multiple IN- (or OUT-) instructions. For more complex peripheral modules, with a larger number of registers, extended addressing is used. In this case a bank of up to 16 subport registers are indirectly addressed with the subport address. The first OUT-instruction writes the subport address to the subaddress register, the second IN- or OUT-instruction reads data from or writes data to the addressed subport.

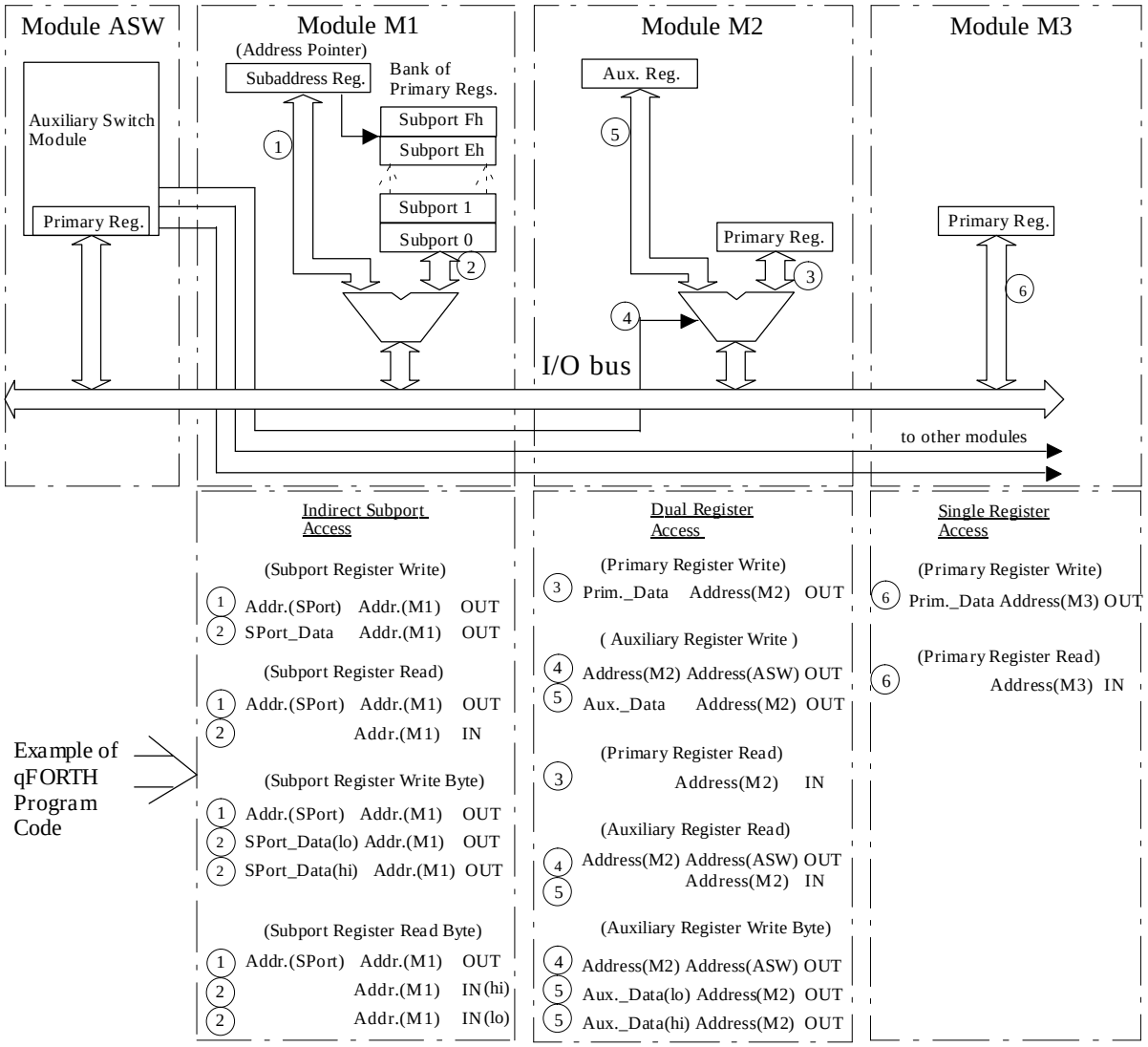

Figure 21. Example of I/O addressing

Table 7 Peripheral addresses

Port Address			Name	Write /Read	Reset Value	Register Function	Module Type	See Page
1			——			Reserved		
2			P2DAT	W/R	1111b	Port 2 – data register / pin data	M2	21
	Aux.		P2CR	W	1111b	Port 2 – control register		21
3			SC	W	1x11b	Port 3 – system configuration register	M3	18
			CWD	R	xxxxb	Watchdog reset	M3	26
	Aux.		CM	W/R	1111b	Port 3 – clock management register	M2	17
4			P4DAT	W/R	1111b	Port 4 – data register / pin data	M2	24
	Aux.		P4CR	W	1111 1111b	Port 4 – control register (byte)		24
5			P5DAT	W/R	1111b	Port 5 – data register / pin data	M2	23
	Aux.		P5CR	W	1111 1111b	Port 5 – control register (byte)		23
6			——			Reserved		
7			T12SUB	W	——	Data to Timer 1/2 subport	M1	19
		Subport address						
		0	T2C	W	0000b	Timer 2 control register	M1	34
		1	T2M1	W	1111b	Timer 2 mode register 1	M1	35
		2	T2M2	W	1111b	Timer 2 mode register 2	M1	36
		3	T2CM	W	0000b	Timer 2 compare mode register	M1	37
		4	T2CO1	W	1111b	Timer 2 compare register 1	M1	37
		5	T2CO2	W	1111 1111b	Timer 2 compare register 2 (byte)	M1	37
		6	——	——	——	Reserved		
		7	——	——	——	Reserved		
		8	T1C1	W	1111b	Timer 1 control register 1	M1	27
		9	T1C2	W	x111b	Timer 1 control register 2	M1	27
		A	WDC	W	1111b	Watchdog control register	M1	28
		B-F			——	Reserved		
8			ASW	W	1111b	Auxiliary / switch register	ASW	19
9			STB	W	xxxx xxxxb	Serial transmit buffer (byte)	M2	46
			SRB	R	xxxx xxxxb	Serial receive buffer (byte)		47
	Aux.		SIC1	W	1111b	Serial interface control register 1		45
A			SISC	W/R	1x11b	Serial interface status / control register	M2	46
	Aux.		SIC2	W	1111b	Serial interface control register 2		45
B			——		——	Reserved		
C			——		——	Reserved		
D			——		——	Reserved		
E			——		——	Reserved		
F			VMC	W	1111b	Voltage monitor control register	M3	14
			VMST	R	xx11b	Voltage monitor status register	M3	14

3.2 Bidirectional Ports

All ports (2, 4 and 5) are 4 bits wide. All ports may be used for data input or output. All ports are equipped with Schmitt trigger inputs and a variety of mask options for open drain, open source, full complementary outputs, pull up and pull down transistors. All Port Data Registers (PxDAT) are I/O mapped to the primary address register of the respective port address and the Port Control Register (PxCR), to the corresponding auxiliary register.

There are three different directional ports available:

Port 2 4-bit wide bitwise-programmable I/O port.

Port 5 4-bit wide bitwise-programmable bidirectional port with optional strong pull-ups and programmable interrupt logic.

Port 4 4-bit wide bitwise-programmable bidirectional port also provides the I/O interface to Timer 2, SSI, voltage monitor input and external interrupt input.

3.2.1 Bidirectional Port 2

This, and all other bidirectional ports include a bitwise programmable Control Register (P2CR), which enables the individual programming of each port bit as input or output. It also opens up the possibility of reading the pin condition when in output mode. This is a useful feature for self testing and for serial bus applications.

Port 2 however, has an increased drive capability and an additional low resistance pull-up/-down transistor mask option.

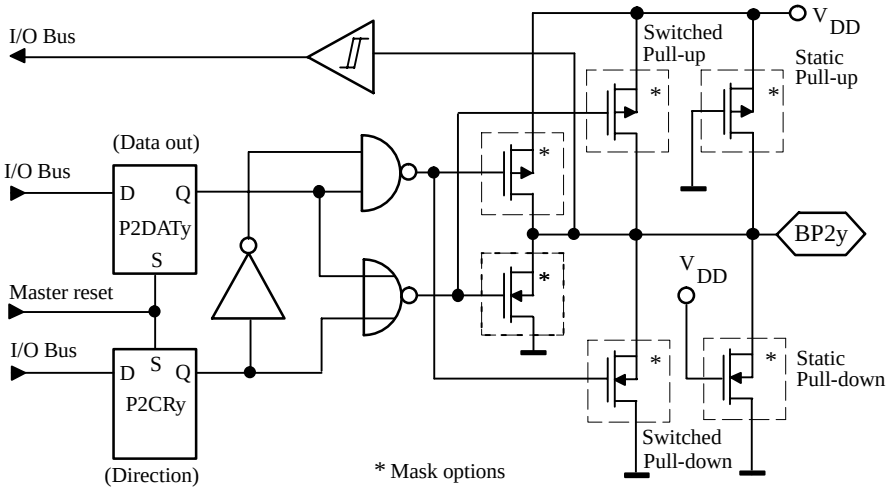

Figure 22. Bidirectional Port 2

Port 2 Data Register (P2DAT)

Primary register address: ’2’hex

	Bit 3 *	Bit 2	Bit 1	Bit 0	
P2DAT	**P2DAT3**	**P2DAT2**	**P2DAT1**	**P2DAT0**	**Reset value: 1111b**

* Bit 3 –> MSB, Bit 0 –> LSB

Port 2 Control Register (P2CR)

Auxiliary register address: ’2’hex

	Bit 3	Bit 2	Bit 1	Bit 0	
P2CR	**P2CR3**	**P2CR2**	**P2CR1**	**P2CR0**	**Reset value: 1111b**

Value: 1111b means all pins in input mode

Code 3 2 1 0	Function
x x x 1	BP20 in input mode
x x x 0	BP20 in output mode
x x 1 x	BP21 in input mode
x x 0 x	BP21 in output mode
x 1 x x	BP22 in input mode
x 0 x x	BP22 in output mode
1 x x x	BP23 in input mode
0 x x x	BP23 in output mode

3.2.2 Bidirectional Port 5

This, and all other bidirectional ports include a bitwise programmable Control Register (P5CR), which allows the individual programming of each port bit as input or output. It also opens up the possibility of reading the pin condition when in output mode. This is a useful feature for self testing and for serial bus applications.

The port pins can also be used as external interrupt inputs (see figures 24 & 25). The interrupts (INT1 and INT6) can be masked or independently configured to trigger on either edge. The interrupt configuration and port direction is controlled by the Port 5 Control Register (P5CR). An additional low resistance pull–up/–down transistor mask option provides an internal bus pull–up for serial bus applications.

The Port 5 Data Register (P5DAT) is I/O mapped to the primary address register of address ’5’h and the Port 5 Control Register (P5CR) to the corresponding auxiliary register. The P5CR is a byte-wide register and is configured by writing first the low nibble then the high nibble (see section 2.1 ”Addressing peripherals”).

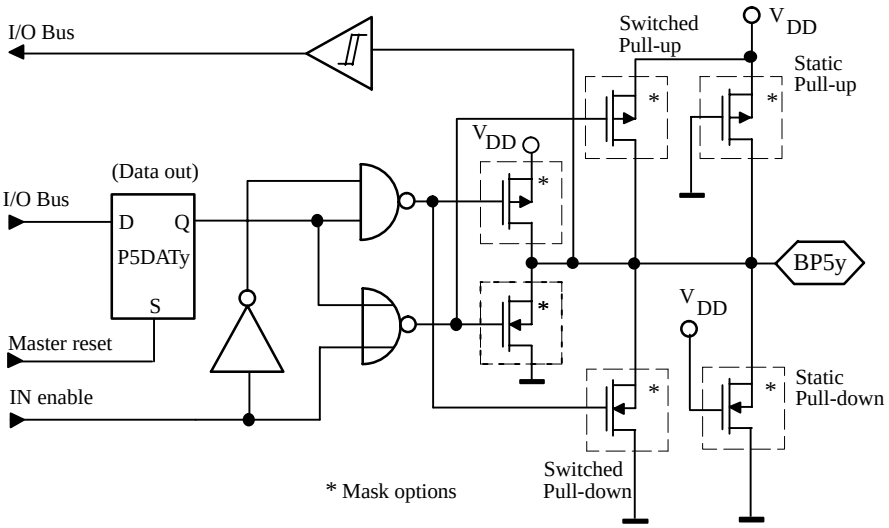

Figure 23. Bidirectional Port 5

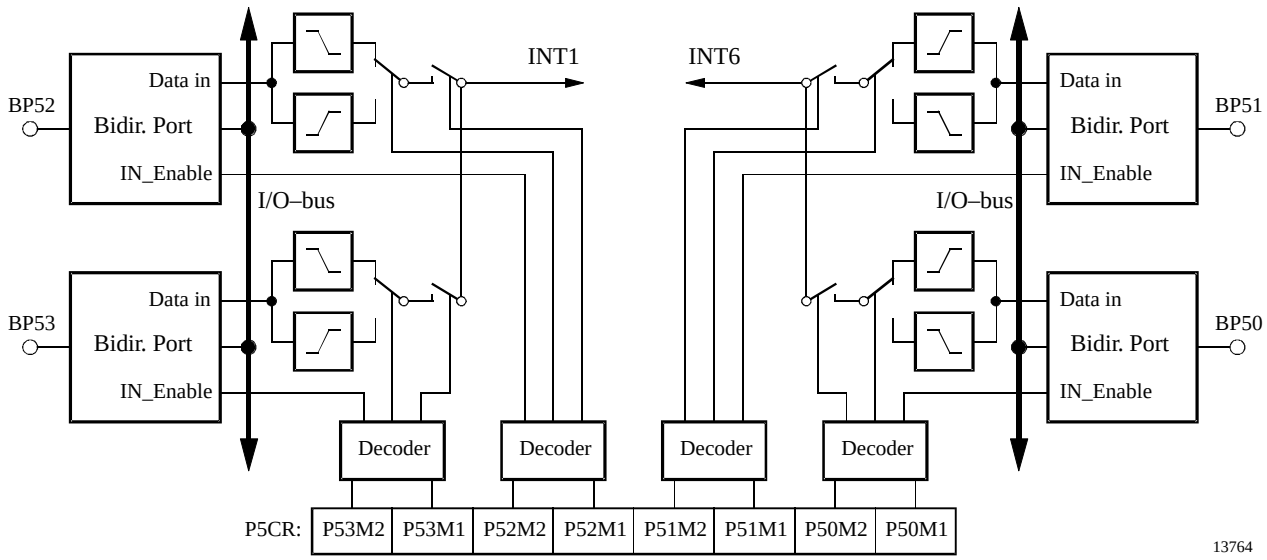

Figure 24. Port 5 external interrupts

Port 5 Data Register (P5DAT)

Primary register address: ’5’hex

	Bit 3	Bit 2	Bit 1	Bit 0	
P5DAT	**P5DAT3**	**P5DAT2**	**P5DAT1**	**P5DAT0**	**Reset value: 1111b**

Port 5 Control Register (P5CR) Byte Write

Auxiliary register address: ’5’hex

		Bit 3	Bit 2	Bit 1	Bit 0	
P5CR	**First write cycle**	**P51M2**	**P51M1**	**P50M2**	**P50M1**	**Reset value: 1111b**
		Bit 7	Bit 6	Bit 5	Bit 4	
	Second write cycle	**P53M2**	**P53M1**	**P52M2**	**P52M1**	**Reset value: 1111b**

P5xM2, P5xM1 – Port 5x Interrupt mode/direction code

Auxiliary Address: ’5’hex First Write Cycle		**Second Write Cycle**	
Code 3 2 1 0	**Function**	**Code 3 2 1 0**	**Function**
x x 1 1	BP50 in input mode – interrupt disabled	x x 1 1	BP52 in input mode – interrupt disabled
x x 0 1	BP50 in input mode – rising edge interrupt	x x 0 1	BP52 in input mode – rising edge interrupt
x x 1 0	BP50 in input mode – falling edge interrupt	x x 1 0	BP52 in input mode – falling edge interrupt
x x 0 0	BP50 in output mode – interrupt disabled	x x 0 0	BP52 in output mode – interrupt disabled
1 1 x x	BP51 in input mode – interrupt disabled	1 1 x x	BP53 in input mode – interrupt disabled
0 1 x x	BP51 in input mode – rising edge interrupt	0 1 x x	BP53 in input mode – rising edge interrupt
1 0 x x	BP51 in input mode – falling edge interrupt	1 0 x x	BP53 in input mode – falling edge interrupt
0 0 x x	BP51 in output mode – interrupt disabled	0 0 x x	BP53 in output mode – interrupt disabled

3.2.3 Bidirectional Port 4

The bidirectional Port 4 is both a bitwise configurable I/O port and provides the external pins for the Timer 2, SSI and the voltage monitor input (VMI). As a normal port, it performs in exactly the same way as bidirectional Port 2 (see figure 26). Two additional multiplexes allow data and port direction control to be passed over to other internal modules (Timer 2, VM or SSI). The I/O-pins for SC and SD line have an additional mode to generate an SSI–interrupt.

All four Port 4 pins can be individually switched by the P4CR–register . Figure 26 shows the internal interfaces to bidirectional Port 4.

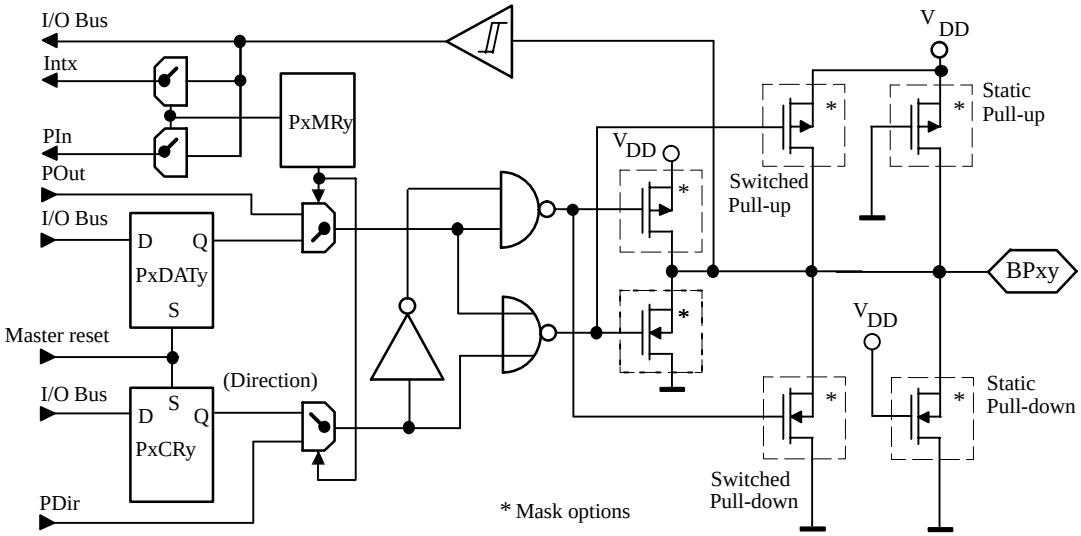

Figure 25. Bidirectional Port 4

Port 4 Data Register (P4DAT)

Primary register address: ’4’hex

	Bit 3	Bit 2	Bit 1	Bit 0	
P4DAT	**P4DAT3**	**P4DAT2**	**P4DAT1**	**P4DAT0**	**Reset value: 1111b**

Port 4 Control Register (P4CR) Byte Write

Auxiliary register address: ’4’hex

		Bit 3	Bit 2	Bit 1	Bit 0	
P4CR	**First write cycle**	**P41M2**	**P41M1**	**P40M2**	**P40M1**	**Reset value: 1111b**
		Bit 7	Bit 6	Bit 5	Bit 4	
	Second write cycle	**P43M2**	**P43M1**	**P42M2**	**P42M1**	**Reset value: 1111b**

P4xM2, P4xM1 – Port 4x Interrupt mode/direction code

Auxiliary Address: '4'hex First Write Cycle		Second Write Cycle	
Code 3 2 1 0	Function	Code 3 2 1 0	Function
x x 1 1	BP40 in input mode	x x 1 1	BP42 in input mode
x x 1 0	BP40 in output mode	x x 1 0	BP42 in output mode
x x 0 1	BP40 enable alternate function (SC for SSI)	x x 0 x	BP42 enable alternate function (T2O for Timer 2)
x x 0 0	BP40 enable alternate function (falling edge interrupt input for INT3)	1 1 x x	BP43 in input mode
1 1 x x	BP41 in intput mode	1 0 x x	BP43 in output mode
1 0 x x	BP41 in output mode	0 1 x x	BP43 enable alternate function (SD for SSI)
0 1 x x	BP41 enable alternate function (VMI for voltage monitor input)	0 0 x x	BP43 enable alternate function (falling edge interrupt input for INT3)
0 0 x x	BP41 enable alternate function (T2I external clock input for Timer 2)	—	—

3.3 Universal Timer/Counter / Communication Module (UTCM)

The **U**niversal **T**imer/counter/**C**ommunication **M**odule (UTCM) consists of Timer 1, Timer 2 and a **S**ynchronous **S**erial **I**nterface (SSI).

- Timer 1 is an interval timer that can be used to generate periodical interrupts and as prescaler for Timer 2, the serial interface and the watchdog function.
- Timer 2 is an 8/12-bit timer with an external clock input (T2I) and an output (T2O).
- The SSI operates as two wire serial interface or as shift register for modulation. The modulator units work together with the timers and shift the data bits out of the shift register.

There is a multitude of modes in which the timers and the serial interface can work together.

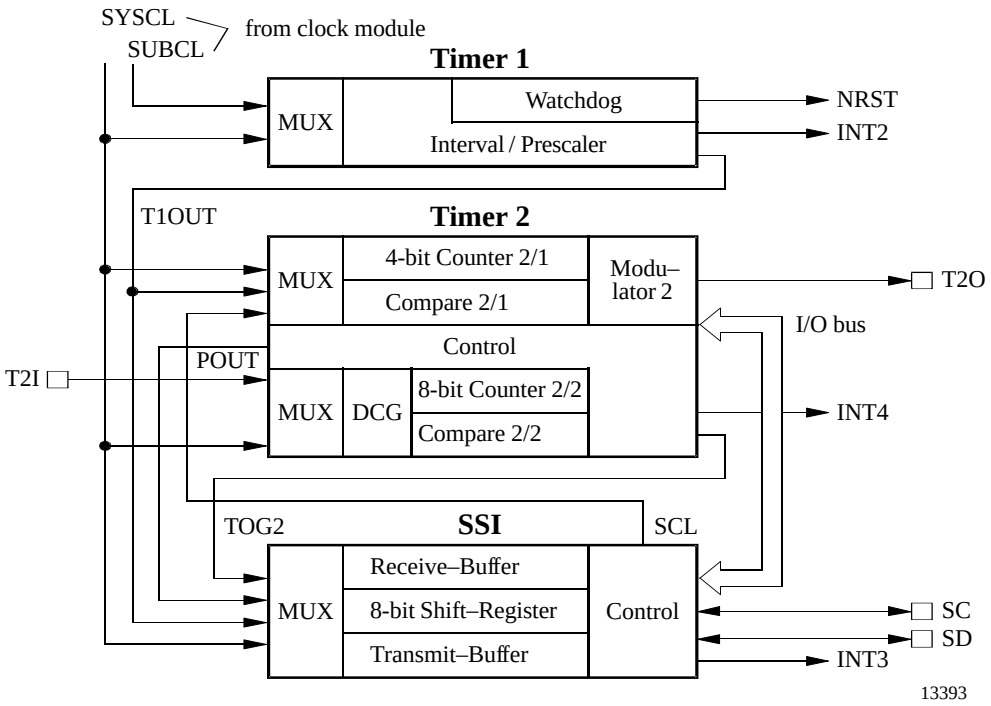

Figure 26. UTCM block diagram

3.3.1 Timer 1

The Timer 1 is an interval timer which can be used to generate periodical interrupts and as prescaler for Timer 2, Timer 3, the serial interface and the watchdog function.

The Timer 1 consists of a programmable 14-stage divider that is driven by either SUBCL or SYSCL. The timer output signal can be used as prescaler clock or as SUBCL and as source for the Timer 1 interrupt. Because of other system requirements the Timer 1 output T1OUT is synchronized with SYSCL. Therefore in the power-down mode SLEEP (CPU core –> sleep and OSC-Stop –> yes) the output T1OUT is stopped (T1OUT=0). Nevertheless the Timer 1 can be active in SLEEP and generate Timer 1 interrupts. The interrupt is maskable via the T1IM bit and the SUBCL can be bypassed via the T1BP bit of the T1C2 register. The time interval for the timer output can be programmed via the Timer 1 control register T1C1.

This timer starts running automatically after any power-on reset ! If the watchdog function is not activated, the timer can be **restarted** by writing into the T1C1 register with T1RM=1.

Timer 1 can also be used as a watchdog timer to prevent a system from stalling. The watchdog timer is a 3-bit counter that is supplied by a separate output of Timer 1. It generates a system reset when the 3-bit counter overflows. To avoid this, the 3-bit counter must be reset before it overflows. The application software has to accomplish this by reading the CWD register.

After power-on reset the watchdog must be activated by software in the $RESET initialization routine. There are two watchdog modes, in one mode the watchdog can be switched on and off by software, in the other mode the watchdog is active and locked. This mode can only be stopped by carrying out a system reset.

The watchdog timer operation mode and the time interval for the watchdog reset can be programmed via the watchdog control register (WDC).

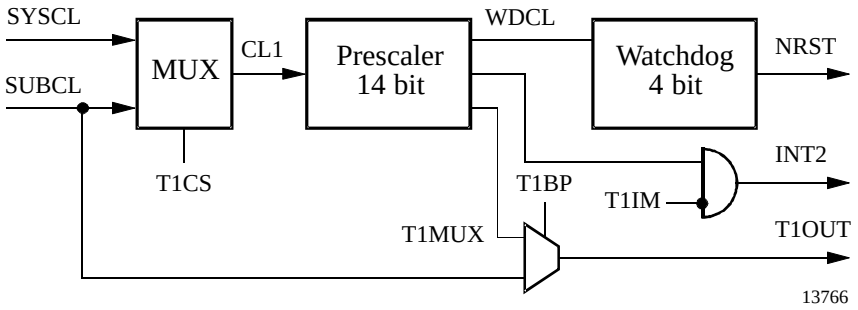

Figure 27. Timer 1 module

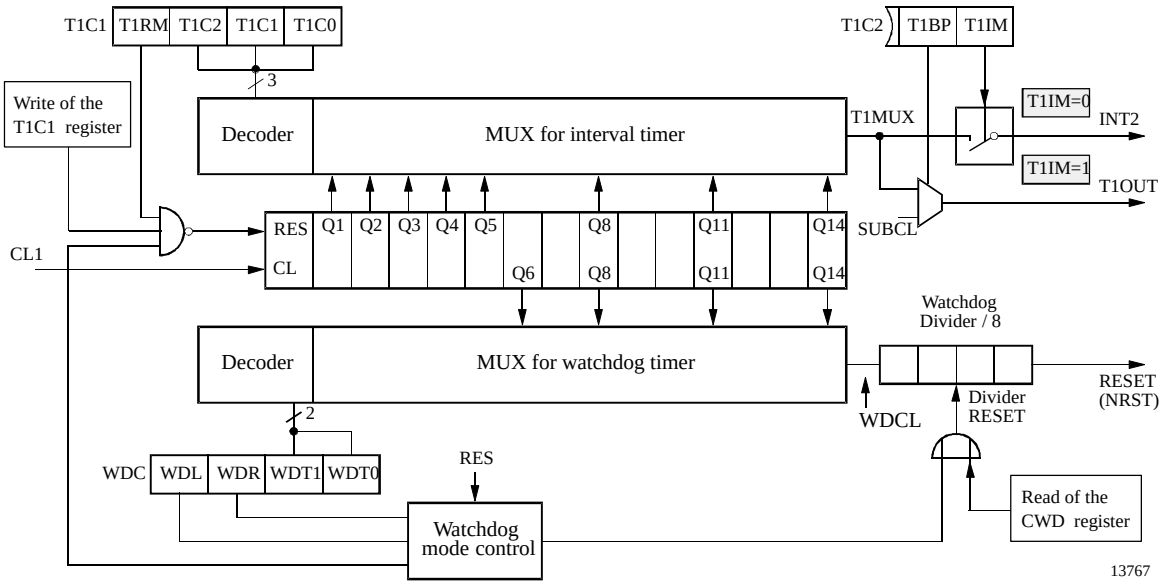

Figure 28. Timer 1 and watchdog

Timer 1 Control Register 1 (T1C1)

Address: ’7’hex – Subaddress: ’8’hex

	Bit 3 *	Bit 2	Bit 1	Bit 0	
T1C1	**T1RM**	**T1C2**	**T1C1**	**T1C0**	**Reset value: 1111b**

* Bit 3 –> MSB, Bit 0 –> LSB

T1RM **T**imer **1** **R**estart **M**ode T1RM = 0, write access without Timer 1 restart
T1RM = 1, write access with Timer 1 restart
Note: if WDL = 0, Timer 1 restart is impossible

T1C2 **T**imer **1** **C**ontrol bit **2**

T1C1 **T**imer **1** **C**ontrol bit **1**

T1C0 **T**imer **1** **C**ontrol bit **0**

The three bits T1C[2:0] select the divider for timer 1. The resulting time interval depends on this divider and the timer 1 input clock source. The timer input can be supplied by the system clock, the 32kHz oscillator or via the clock management. If the clock management generates the SUBCL, the selected input clock from the RC oscillator, 4MHz oscillator or an external clock is divided by 16.

T1C2	T1C1	T1C0	Divider	Time Interval with SUBCL	Time Interval with SUBCL = 32 kHz	Time Interval with SYSCL = 2/1 MHz
0	0	0	2	SUBCL / 2	61 µs	1 µs / 2 µs
0	0	1	4	SUBCL / 4	122 µs	2 µs / 4 µs
0	1	0	8	SUBCL / 8	244 µs	4 µs / 8 µs
0	1	1	16	SUBCL / 16	488 µs	8 µs / 16 µs
1	0	0	32	SUBCL / 32	0.977 ms	16 µs / 32 µs
1	0	1	256	SUBCL / 256	7.812 ms	128 µs / 256 µs
1	1	0	2048	SUBCL / 2048	62.5 ms	1024 µs / 2048 µs
1	1	1	16384	SUBCL / 16384	500 ms	8192 µs / 16384 µs

Timer 1 Control Register 2 (T1C2)

Address: ’7’hex – Subaddress: ’9’hex

	Bit 3 *	Bit 2	Bit 1	Bit 0	
T1C2	**– – –**	**T1BP**	**T1CS**	**T1IM**	**Reset value: x111b**

* Bit 3 –> MSB, Bit 0 –> LSB

T1BP **T**imer **1** SUBCL **By**P**assed**
T1BP = 1, TIOUT = T1MUX
T1BP = 0, T1OUT = SUBCL

T1CS **T**imer **1** input **C**lock **S**elect
T1CS = 1, CL1 = SUBCL (see figure 28)
T1CS = 0, CL1 = SYSCL (see figure 28)

T1IM **T**imer **1** **I**nterrupt **M**ask
T1IM = 1, disables Timer 1 interrupt
T1IM = 0, enables Timer 1 interrupt

Watchdog Control Register (WDC)

Address: ’7’hex – Subaddress: ’A’hex

	Bit 3 *	Bit 2	Bit 1	Bit 0	
WDC	**WDL**	**WDR**	**WDT1**	**WDT0**	**Reset value: 1111b**

* Bit 3 –> MSB, Bit 0 –> LSB

WDL **W**atch**D**og **L**ock mode
WDL = 1, the watchdog can be enabled and disabled by using the WDR-bit
WDL = 0, the watchdog is enabled and locked. In this mode the WDR-bit has no effect. After the WDL-bit is cleared, the watchdog is active until a system reset or power-on reset occurs.

WDR **W**atch**D**og **R**un and stop mode
WDR = 1, the watchdog is stopped / disabled
WDR = 0, the watchdog is active / enabled

WDT1 **W**atch**D**og **T**ime **1**

WDT0 **W**atch**D**og **T**ime **0**

Both these bits control the time interval for the watchdog reset

WDT1	WDT0	Divider	Delay Time to Reset with SUBCL = 32 kHz	Delay Time to Reset with SYSCL = 2 / 1 MHz
0	0	512	15.625 ms	0.256 ms / 0.512 ms
0	1	2048	62.5 ms	1.024 ms / 2.048 ms
1	0	16384	0.5 s	8.2 ms / 16.4 ms
1	1	131072	4 s	65.5 ms / 131 ms

3.3.2 Timer 2

Features: 8/12 bit timer for

- Interrupt, square-wave, pulse and duty-cycle generation
- Baud-rate generation for the internal shift register
- Manchester and Biphase modulation together with the SSI
- Carrier frequency generation and modulation together with the SSI

Timer 2 can be used as interval timer for interrupt generation, as signal generator or as baud-rate generator and modulator for the serial interface. It consists of a 4-bit and an 8-bit up counter stage which both have compare registers. The 4-bit counter stages of Timer 2 are cascadable as 12-bit timer or as 8-bit timer with 4-bit prescaler. The timer can also be configured as 8-bit timer and separate 4-bit prescaler.

The Timer 2 input can be supplied via the system clock, the external input clock (T2I), the Timer 1 output clock or the shift clock of the serial interface. The external input clock T2I is not synchronized with SYSCL. Therefore it is possible to use Timer 2 with a higher clock speed than SYSCL. Furthermore with that input clock the Timer 2 operates in the power-down mode SLEEP (CPU core –> sleep and OSC–Stop –> yes) as well as in the POWER-DOWN (CPU core –> sleep and OSC–Stop –> no). All other clock sources supplied no clock signal in SLEEP. The 4-bit counter stages of Timer 2 have an additional clock output (POUT).

Its output has a modulator stage that allows the generation of pulses as well as the generation and modulation of carrier frequencies. The Timer 2 output can modulate with the shift register internal data output to generate Biphase- or Manchester-code.

If the serial interface is used to modulate a bitstream, the 4-bit stage of Timer 2 has a special task. The shift register can only handle bitstream lengths divisible by 8. For other lengths, the 4-bit counter stage can be used to stop the modulator after the right bitcount is shifted out.

If the timer is used for carrier frequency modulation, the 4-bit stage works together with an additional 2-bit duty-cycle generator like a 6-bit prescaler to generate carrier frequency and duty cycle. The 8-bit counter is used to enable and disable the modulator output for a programmable count of pulses.

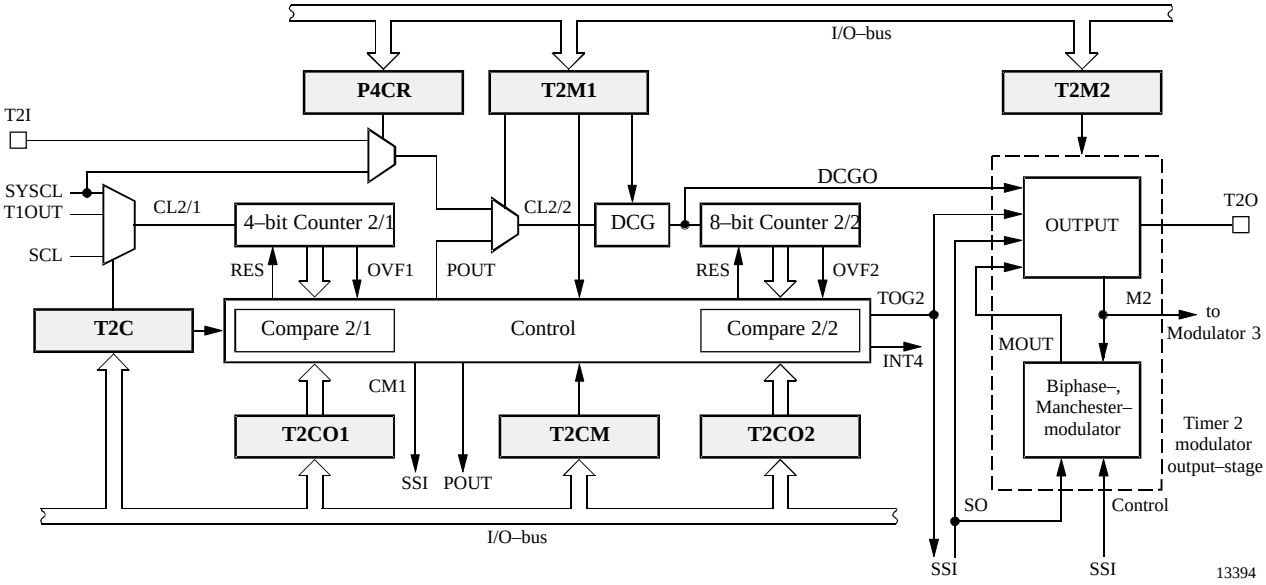

Figure 29. Timer 2

For programming the time interval, the timer has a 4-bit and an 8-bit compare register. For programming the timer function, it has four mode and control registers. The comparator output of stage 2 is controlled by a special compare mode register (T2CM). This register contains mask bits for the actions (counter reset, output toggle, timer interrupt) which can be triggered by a compare match event or the counter overflow. This architecture enables the timer function for various modes.

Timer 2 compare data values

The Timer 2 has a 4-bit compare register (T2CO1) and an 8-bit compare register (T2CO2). Both these compare registers are cascadable as a 12-bit compare register, or 8-bit compare register and 4-bit compare register.

For 12-bit compare data value: $m = x + 1 \quad 0 \le x \le 4095$

For 8-bit compare data value: $n = y + 1 \quad 0 \le y \le 255$

For 4-bit compare data value: $l = z + 1 \quad 0 \le z \le 15$

Timer 2 Modes

Mode 1: 12-bit compare counter

The 4-bit stage and the 8-bit stage work together as a 12-bit compare counter. A compare match signal of the 4-bit and the 8-bit stage generates the signal for the counter reset, toggle flip-flop or interrupt. The compare action is programmable via the compare mode register (T2CM). The 4-bit counter overflow (OVF1) supplies the clock output (POUT) with clocks. The duty-cycle generator (DCG) has to be bypassed in this mode.

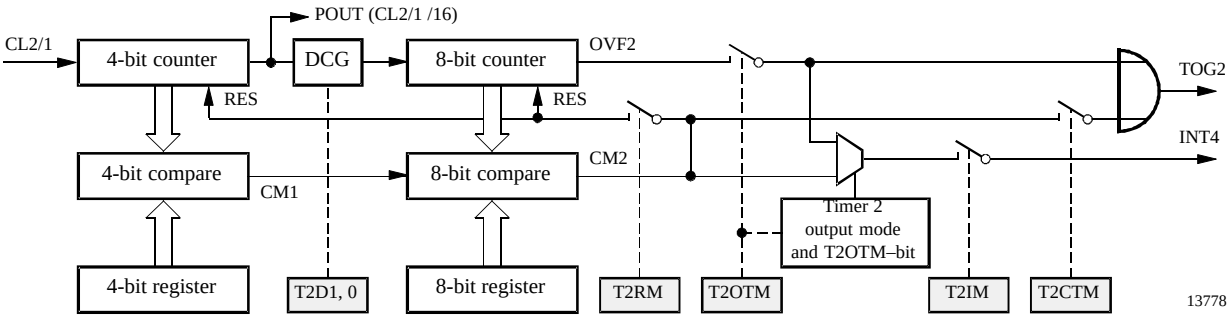

Figure 30. 12-bit compare counter

Mode 2: 8-bit compare counter with 4-bit programmable prescaler

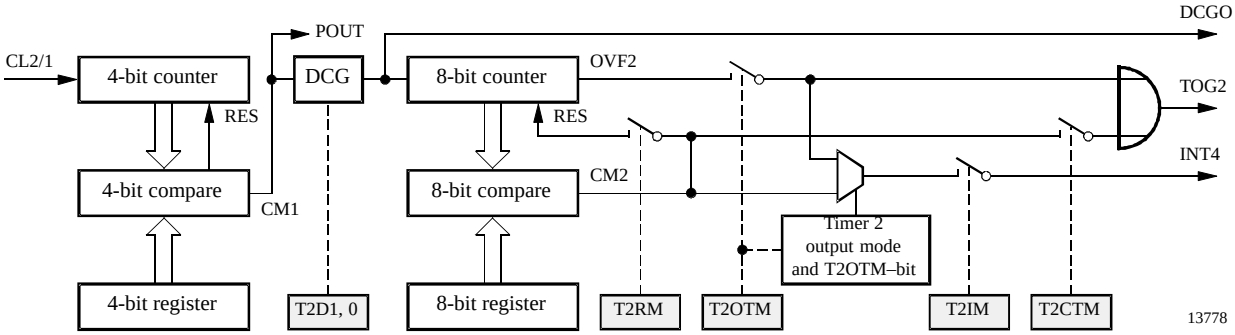

Figure 31. 8-bit compare counter

The 4-bit stage is used as programmable prescaler for the 8-bit counter stage. In this mode, a duty-cycle stage is also available. This stage can be used as an additional 2-bit prescaler or for generating duty cycles of 25%, 33% and 50%. The 4-bit compare output (CM1) supplies the clock output (POUT) with clocks.

Mode 3/4: 8-bit compare counter and 4-bit programmable prescaler

In these modes the 4-bit and the 8-bit counter stages work independently as a 4-bit prescaler and an 8-bit timer with an 2-bit prescaler or as a duty-cycle generator. Only in the mode 3 and mode 4, can the 8-bit counter be supplied via the external clock input (T2I) which is selected via the P4CR register. The 4-bit prescaler is started via activating of mode 3 and stopped and reset in mode 4. Changing mode 3 and 4 has no effect for the 8-bit timer stage. The 4-bit stage can be used as prescaler for the SSI or to generate the stop signal for modulator 2.

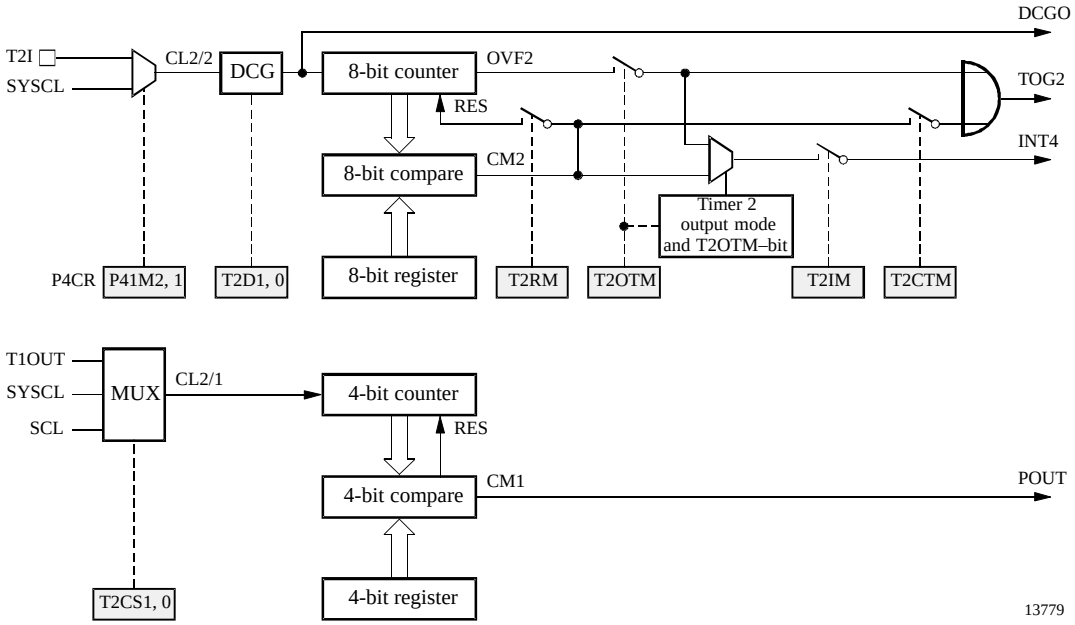

Figure 32. 4-/8-bit compare counter

Timer 2 Output Modes

The signal at the timer output is generated via modulator 2. In the toggle mode, the compare match event toggles the output T2O. For high resolution duty-cycle modulation 8 bits or 12 bits can be used to toggle the output. In the duty-cycle burst modulator modes the DCG output is connected to T2O and switched on and off either by the toggle flipflop output or the serial data line of the SSI. Modulator 2 also has 2 modes to output the content of the serial interface as Biphase or Manchester code.

The modulator output stage can be configured by the output control bits in the T2M2 register. The modulator is started with the start of the shift register (SIR = 0) and stopped either by carrying out a shift register stop (SIR = 1) or compare match event of stage 1 (CM1) of Timer 2. For this task, Timer 2 mode 3 must be used and the prescaler has to be supplied with the internal shift clock (SCL).

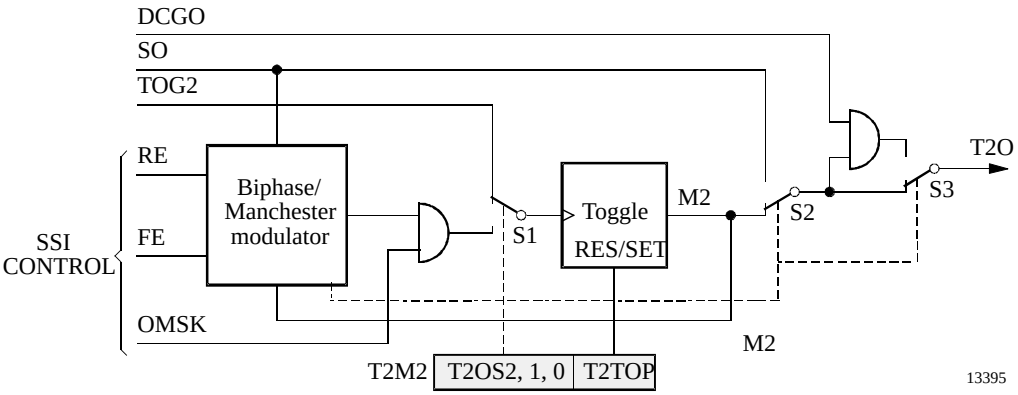

Figure 33. Timer 2 modulator output stage

Timer 2 Output Signals

Timer 2 output mode 1:
Toggle mode A: a Timer 2 compare match toggles the output flip-flop (M2) –> T2O

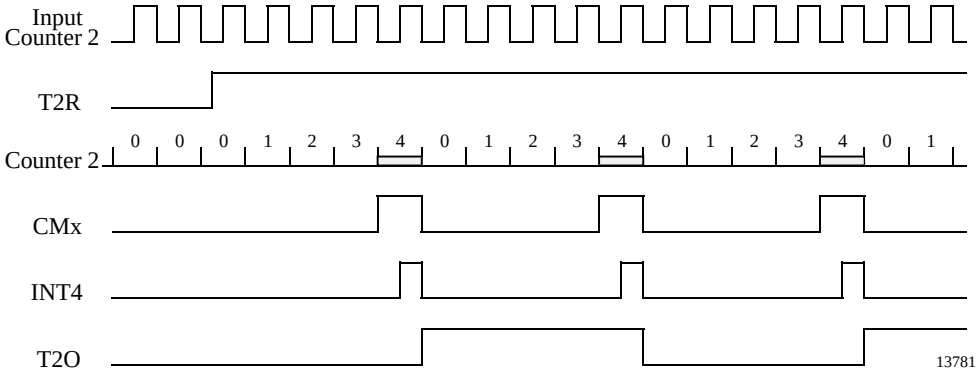

Figure 34. Interrupt timer / square wave generator – the output toggles with each edge compare match event

Timer 2 output mode 1:
Toggle mode B: a Timer 2 compare match toggles the output flip-flop (M2) –> T2O

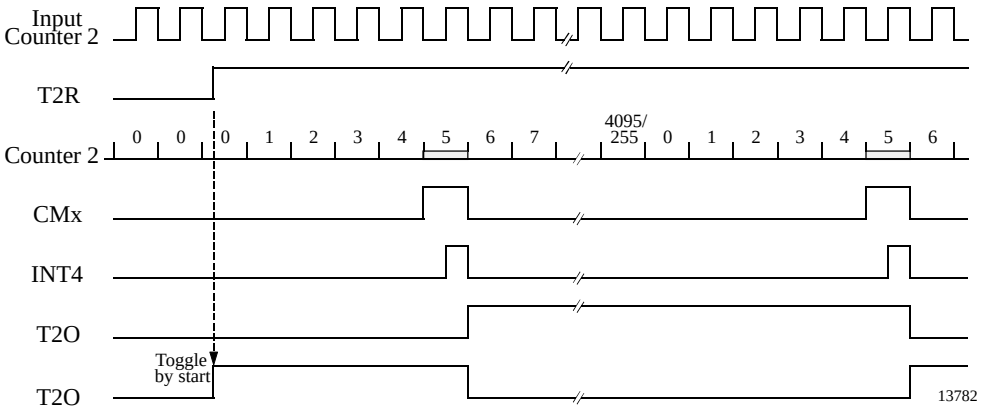

Figure 35. Pulse generator – the timer output toggles with the timer start if the T2TS-bit is set

Timer 2 output mode 1:
Toggle mode C: a Timer 2 compare match toggles the output flip-flop (M2) –> T2O

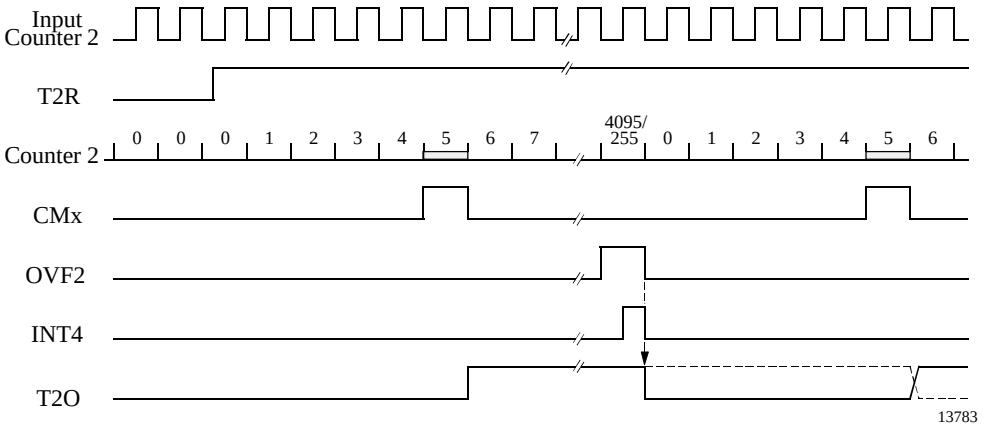

Figure 36. Pulse generator – the timer toggles with timer overflow and compare match

Timer 2 output mode 2:
Duty-cycle burst generator 1: the DCG output signal (DCGO) is given to the output, and gated by the output flip-flop (M2)

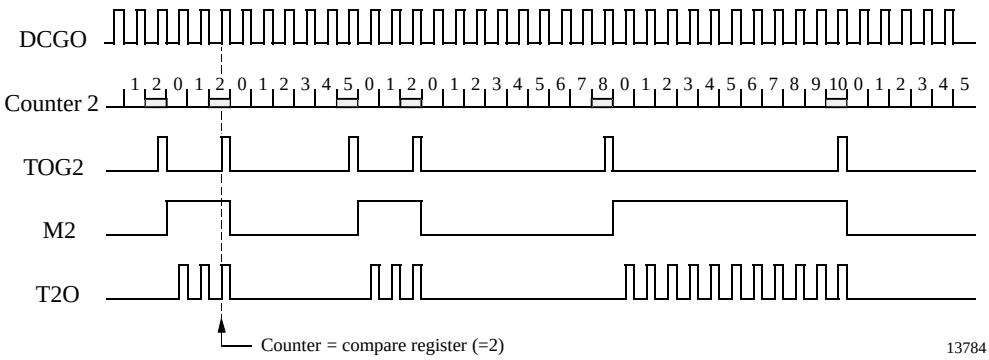

Figure 37. Carrier frequency burst modulation with Timer 2 toggle flip-flop output

Timer 2 output mode 3:
Duty-cycle burst generator 2: the DCG output signal (DCGO) is given to the output, and gated by the SSI internal data output (SO)

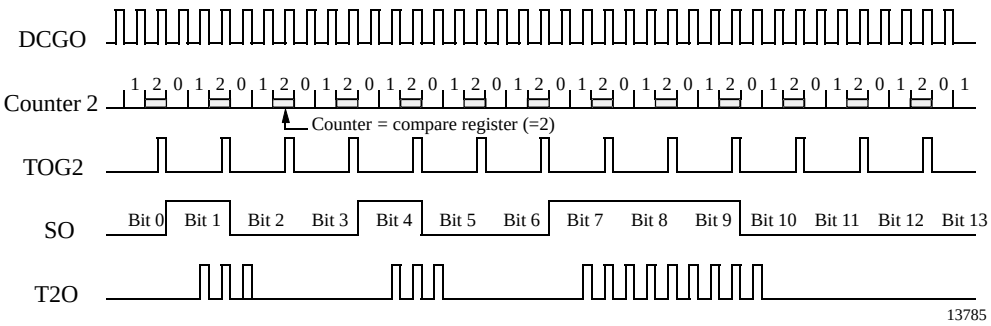

Figure 38. Carrier frequency burst modulation with the SSI data output

Timer 2 output mode 4:
Biphase modulator: Timer 2 modulates the SSI internal data output (SO) to Biphase code.

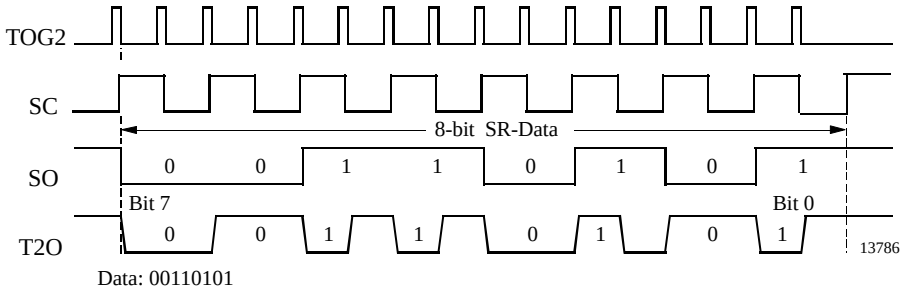

Figure 39. Biphase modulation

Timer 2 output mode 5:
Manchester modulator: Timer 2 modulates the SSI internal data output (SO) to Manchester code

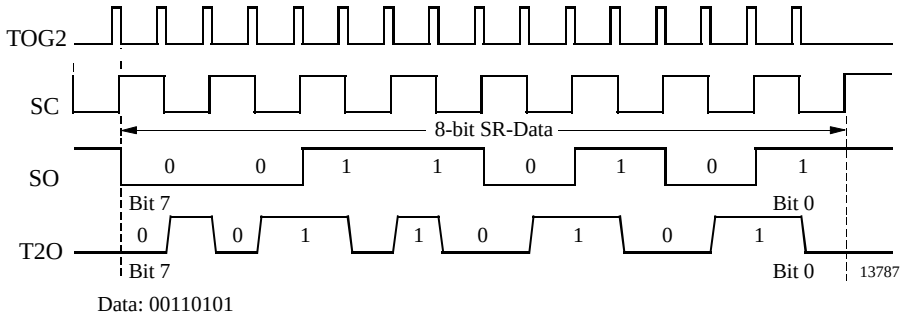

Figure 40. Manchester modulation

Timer 2 output mode 7: PWM mode: Pulse–width modulation output on Timer 2 output pin (T2O)

In this mode the timer overflow defines the period and the compare register defines the duty cycle. During one period only the first compare match occurence is used to toggle the timer output flip-flop, until the overflow all further compare match are ignored. This avoids the stuation that changing the compare register causes the occurence of several compare match during one period. The resolution at the pulse-width modulation Timer 2 mode 1 is 12-bit and all other Timer 2 modes are 8-bit.

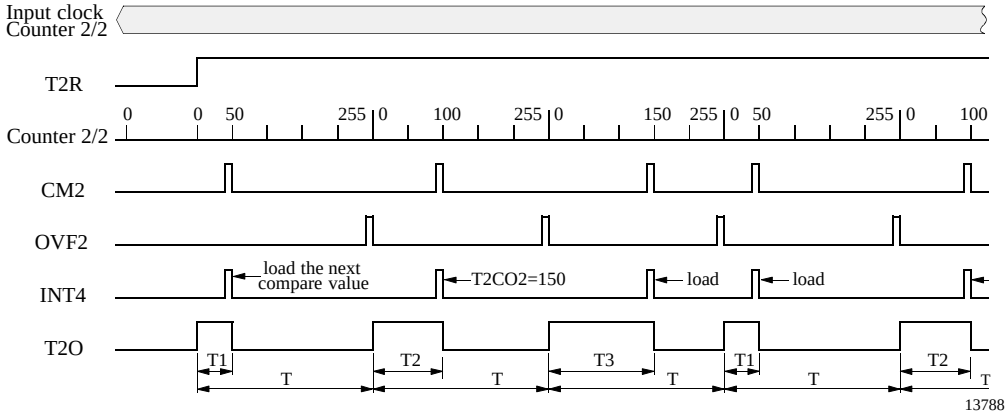

Figure 41. PWM modulation

Timer 2 Registers

Timer 2 has 6 control registers to configure the timer mode, the time interval, the input clock and its output function. All registers are indirectly addressed using extended addressing as described in section ”Addressing peripherals”. The alternate functions of the Ports BP41 or BP42 must be selected with the Port 4 control register P4CR, if one of the Timer 2 modes require an input at T2I/BP41 or an output at T2O/BP42.

Timer 2 Control Register (T2C)

Address: ’7’hex – Subaddress: ’0’hex

	Bit 3	Bit 2	Bit 1	Bit 0	
T2C	**T2CS1**	**T2CS0**	**T2TS**	**T2R**	**Reset value: 0000b**

T2CS1 **T**imer **2** **C**lock **S**elect bit **1**

T2CS0 **T**imer **2** **C**lock **S**elect bit **0**

T2CS1	T2CS0	Input Clock (CL 2/1) of Counter Stage 2/1
0	0	System clock (SYSCL)
0	1	Output signal of Timer 1 (T1OUT)
1	0	Internal shift clock of SSI (SCL)
1	1	Reserved

T2TS **T**imer **2** **T**oggle with **S**tart
T2TS = 0, the output flip-flop of Timer 2 is not toggled with the timer start
T2TS = 1, the output flip-flop of Timer 2 is toggled when the timer is started with T2R

T2R **T**imer **2** **R**un
T2R = 0, Timer 2 stop and reset
T2R = 1, Timer 2 run

Timer 2 Mode Register 1 (T2M1)

Address: ’7’hex – Subaddress: ’1’hex

	Bit 3	Bit 2	Bit 1	Bit 0	
T2M1	**T2D1**	**T2D0**	**T2MS1**	**T2MS0**	**Reset value: 1111b**

T2D1 **T**imer **2** **D**uty cycle bit **1**
T2D0 **T**imer **2** **D**uty cycle bit **0**

T2D1	T2D0	Function of Duty-Cycle Generator (DCG)	Additional Divider Effect
1	1	Bypassed (DCGO0)	/ 1
1	0	Duty cycle 1/1 (DCGO1)	/ 2
0	1	Duty cycle 1/2 (DCGO2)	/ 3
0	0	Duty cycle 1/3 (DCGO3)	/ 4

T2MS1 **T**imer **2** **M**ode **S**elect bit **1**
T2MS0 **T**imer **2** **M**ode **S**elect bit **0**

Mode	T2MS1	T2MS0	Clock Output (POUT)	Timer 2 Modes
1	1	1	4-bit counter overflow (OVF1)	12-bit compare counter, the DCG have to be bypassed in this mode
2	1	0	4-bit compare output (CM1)	8-bit compare counter with 4-bit programmable prescaler and duty-cycle generator
3	0	1	4-bit compare output (CM1)	8-bit compare counter clocked by SYSCL or the external clock input T2I, 4-bit prescaler run, the counter 2/1 starts after writing mode 3
4	0	0	4-bit compare output (CM1)	8-bit compare counter clocked by SYSCL or the external clock input T2I, 4-bit prescaler stop and resets

Duty-Cycle Generator

The duty-cycle generator generates duty cycles from 25%, 33% or 50%. The frequency at the duty-cycle generator output depends on the duty cycle and the Timer 2 prescaler setting. The DCG-stage can also be used as additional programmable prescaler for Timer 2.

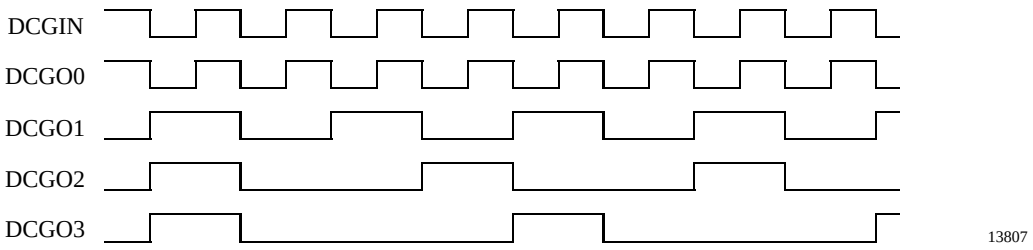

Figure 42. DCG output signals

Timer 2 Mode Register 2 (T2M2)

Address: ’7’hex – Subaddress: ’2’hex

	Bit 3	Bit 2	Bit 1	Bit 0	
T2M2	**T2TOP**	**T2OS2**	**T2OS1**	**T2OS0**	**Reset value: 1111b**

T2TOP **T**imer **2** **T**oggle **O**utput **P**reset
This bit allows the programmer to preset the Timer 2 output T2O.
T2TOP = 0, resets the toggle outputs with the write cycle (M2 = 0)
T2TOP = 1, sets toggle outputs with the write cycle (M2 = 1)
Note: If T2R = 1, no output preset is possible

T2OS2 **T**imer **2** **O**utput **S**elect bit **2**
T2OS1 **T**imer **2** **O**utput **S**elect bit **1**
T2OS0 **T**imer **2** **O**utput **S**elect bit **0**

Output Mode	T2OS2	T2OS1	T2OS0	Clock Output (POUT)
1	1	1	1	Toggle mode: a Timer 2 compare match toggles the output flip-flop (M2) –> T2O
2	1	1	0	Duty-cycle burst generator 1: the DCG output signal (DCG0) is given to the output and gated by the output flip-flop (M2)
3	1	0	1	Duty-cycle burst generator 2: the DCG output signal (DCGO) is given to the output and gated by the SSI internal data output (SO)
4	1	0	0	Biphase modulator: Timer 2 modulates the SSI internal data output (SO) to Biphase code
5	0	1	1	Manchester modulator: Timer 2 modulates the SSI internal data output (SO) to Manchester code
6	0	1	0	SSI output: T2O is used directly as SSI internal data output (SO)
7	0	0	1	PWM mode: an 8/12-bit PWM mode
8	0	0	0	Not allowed

If one of these output modes is used the T2O alternate function of Port 4 must also be activated.

Timer 2 Compare and Compare Mode Registers

Timer 2 has two separate compare registers, T2CO1 for the 4-bit stage and T2CO2 for the 8-bit stage of Timer 2. The timer compares the contents of the compare register current counter value and if it matches it generates an output signal. Dependent on the timer mode, this signal is used to generate a timer interrupt, to toggle the output flip-flop as SSI clock or as a clock for the next counter stage.

In the 12-bit timer mode, T2CO1 contains bits 0 to 3 and T2CO2 bits 4 to 11 of the 12-bit compare value. In all other modes, the two compare registers work independently as a 4- and 8-bit compare register. When assigned to the compare register a compare event will be supressed.

Timer 2 Compare Mode Register (T2CM)

Address: ’7’hex – Subaddress: ’3’hex

	Bit 3	Bit 2	Bit 1	Bit 0	
T2CM	**T2OTM**	**T2CTM**	**T2RM**	**T2IM**	**Reset value: 0000b**

T2OTM **T**imer **2** **O**verflow **T**oggle **M**ask bit
T2OTM = 0, disable overflow toggle
T2OTM = 1, enable overflow toggle, a counter overflow (OVF2) toggles output flip-flop (TOG2). If the T2OTM-bit is set, only a counter overflow can generate an interrupt except on the Timer 2 output mode 7.

T2CTM **T**imer **2** **C**ompare **T**oggle **M**ask bit
T2CTM = 0, disable compare toggle
T2CTM = 1, enable compare toggle, a match of the counter with the compare register toggles output flip-flop (TOG2). In Timer 2 output mode 7 and when the T2CTM-bit is set, only a match of the counter with the compare register can generate an interrupt.

T2RM **T**imer **2** **R**eset **M**ask bit
T2RM = 0, disable counter reset
T2RM = 1, enable counter reset, a match of the counter with the compare register resets the counter

T2IM **T**imer **2** **I**nterrupt **M**ask bit
T2IM = 0, disable Timer 2 interrupt
T2IM = 1, enable Timer 2 interrupt

Timer 2 Output Mode	T2OTM	T2CTM	Timer 2 Interrupt Source
1, 2, 3, 4, 5 and 6	0	x	Compare match (CM2)
1, 2, 3, 4, 5 and 6	1	x	Overflow (OVF2)
7	x	1	Compare match (CM2)

Timer 2 COmpare Register 1 (T2CO1)

Address: ’7’hex – Subaddress: ’4’hex

T2CO1	**Write cycle**	**Bit 3**	**Bit 2**	**Bit 1**	**Bit 0**	**Reset value: 1111b**

In prescaler mode the clock is bypassed if the compare register T2CO1 contains 0.

Timer 2 COmpare Register 2 (T2CO2) Byte Write

Address: ’7’hex – Subaddress: ’5’hex

T2CO2	**First write cycle**	**Bit 3**	**Bit 2**	**Bit 1**	**Bit 0**	**Reset value: 1111b**
	Second write cycle	**Bit 7**	**Bit 6**	**Bit 5**	**Bit 4**	**Reset value: 1111b**

3.3.3 Synchronous Serial Interface (SSI)

SSI Features:

2 and 3 wire NRZ

2 wire mode (I^2C compatible)

(additional internal 2 wire link for multi-chip packaging solutions)

- With Timer 2:

Biphase modulation

Manchester modulation

pulse-width demodulation

Burst modulation

SSI Peripheral Configuration

The synchronous serial interface (SSI) can be used either for serial communication with external devices such as EEPROMs, shift registers, display drivers, other microcontrollers, or as a means for generating and capturing on-chip serial streams of data. External data communication takes place via the Port 4 (BP4) multi-functional port which can be software configured by writing the appropriate control word into the P4CR register. The SSI can be configured in any one of the following ways:

a) 2-wire external interface for bidirectional data communication with one data terminal and one shift clock. The SSI uses the Port BP43 as a bidirectional serial data line (SD) and BP40 as shift clock line (SC).

b) 3-wire external interface for simultaneous input and output of serial data, with a serial input data terminal (SI), a serial output data terminal (SO) and a shift clock (SC). The SSI uses BP40 as shift clock (SC), while the serial data input (SI) is applied to BP43 (configured in P4CR as input!). Serial output data (SO) in this case is passed through to BP42 (configured in P4CR to T2O) via the Timer 2 output stage (T2M2 configured in mode 6).

c) Timer/SSI combined modes – the SSI used together with Timer 2 is capable of performing a variety of data modulation and functions (see Timer Section). The modulating data is converted by the SSI into a continuous serial stream of data which is in turn modulated in one of the timer functional blocks.

d) Multi-chip link (MCL) – the SSI can also be used as an interchip data interface for use in single package multi–chip modules or hybrids. For such applications, the SSI is provided with two dedicated pads (MCL_SD and MCL_SC) which act as a two-wire chip-to-chip link. The MCL can be activated by the MCL control bit. Should these MCL pads be used by the SSI, the standard SD and SC pins are not required and the corresponding Port 4 ports are available as conventional data ports.

General SSI Operation

The SSI is comprised essentially of an 8-bit shift register with two associated 8-bit buffers – the receive buffer (SRB) for capturing the incoming serial data and a transmit buffer (STB) for intermediate storage of data to be serially output. Both buffers are directly accessable by software. Transferring the parallel buffer data into and out of the shift register is controlled automatically by the SSI control, so that both single byte transfers or continuous bit streams can be supported.

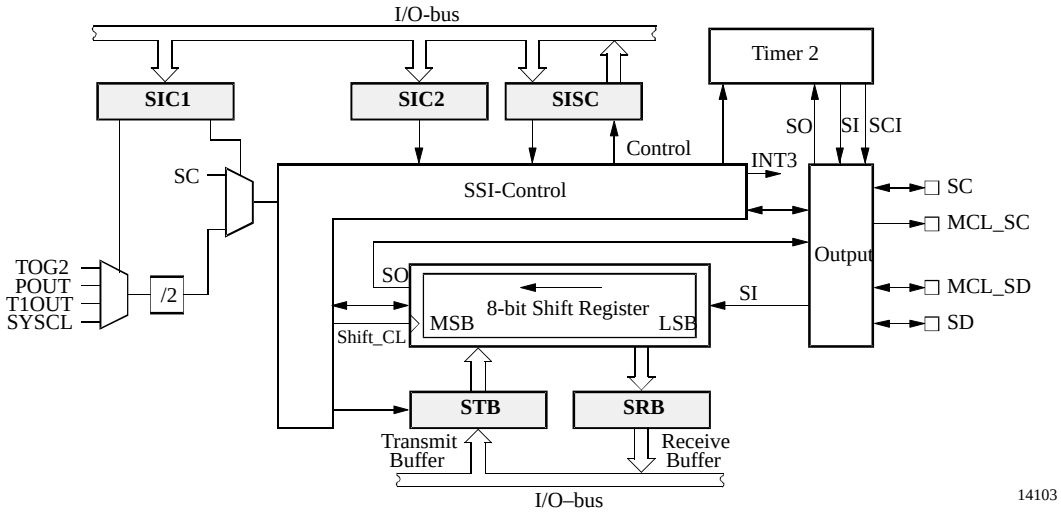

Figure 43. Block diagram of the synchronous serial interface

The SSI can generate the shift clock (SC) either from one of several on-chip clock sources or accept an external clock. The external shift clock is output on, or applied to the Port BP40. Selection of an external clock source is performed by the Serial Clock Direction control bit (SCD). In the combinational modes, the required clock is selected by the corresponding timer mode.

The SSI can operate in three data transfer modes – synchronous 8-bit shift mode, I^2C compatible 9-bit shift modes or 8-bit pseudo I^2C protocol (without acknowl-edge-bit).

External SSI clocking is not supported in these modes. The SSI should thus generate and has full control over the shift clock so that it can always be regarded as an I^2C Bus Master device.

All directional control of the external data port used by the SSI is handled automatically and is dependent on the transmission direction set by the Serial Data Direction (SDD) control bit. This control bit defines whether the SSI is currently operating in Transmit (TX) mode or Receive (RX) mode.

Serial data is organized in 8-bit telegrams which are shifted with the most significant bit first. In the 9-bit I^2C mode, an additional acknowledge bit is appended to the end of the telegram for handshaking purposes (see I^2C protocol).

At the beginning of every telegram, the SSI control loads the transmit buffer into the shift register and proceeds immediately to shift data serially out. At the same time, incoming data is shifted into the shift register input. This incoming data is automatically loaded into the receive buffer when the complete telegram has been received. Data can, if required thus be simultaneously received and transmitted.

Before data can be transferred, the SSI must first be activated. This is performed by means of the SSI reset control (SIR) bit. All further operation then depends on the data directional mode (TX/RX) and the present status of the SSI buffer registers shown by the Serial Interface Ready Status Flag (SRDY). This SRDY flag indicates the (empty/full) status of either the transmit buffer (in TX mode), or the receive buffer (in RX mode). The control logic ensures that data shifting is temporarily halted at any time, if the appropriate receive/transmit buffer is not ready (SRDY = 0). The SRDY status will then automatically be set back to ‘1’ and data shifting resumed as soon as the application software loads the new data into the transmit register (in TX mode) or frees the shift register by reading it into the receive buffer (in RX mode).

A further activity status (ACT) bit indicates the present status of the serial communication. The ACT bit remains high for the duration of the serial telegram or if I^2C stop or start conditions are currently being generated. Both the current SRDY and ACT status can be read in the SSI status register. To deactivate the SSI, the SIR bit must be set high.

8-bit Synchronous Mode

In the 8-bit synchronous mode, the SSI can operate as either a 2 or 3 wire interface (see SSI peripheral configuration). The serial data (SD) is received or transmitted in NRZ format, synchronised to either the rising or falling edge of the shift clock (SC). The choice of clock edge is defined by the Serial Mode Control bits (SM0,SM1). It should be noted that the transmission edge refers to the SC clock edge with which the SD changes. To avoid clock skew problems, the incoming serial input data is shifted in with the opposite edge.

When used together with one of the timer modulator or demodulator stages, the SSI must be set in the 8-bit synchronous mode 1.

In RX mode, as soon as the SSI is activated (SIR= 0), 8 shift clocks are generated and the incoming serial data is shifted into the shift register. This first telegram is automatically transferred into the receive buffer and the SRDY set to 0 indicating that the receive buffer contains valid data. At the same time an interrupt (if enabled) is generated.

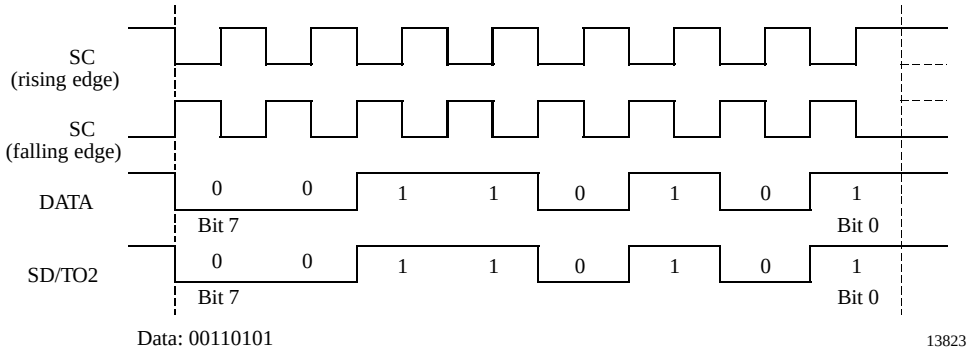

Figure 44. 8-bit synchronous mode

The SSI then continues shifting in the following 8-bit telegram. If, during this time the first telegram has been read by the controller, the second telegram will also be transferred in the same way into the receive buffer and the SSI will continue clocking in the next telegram. Should, however, the first telegram not have been read (SRDY=1), then the SSI will stop, temporarily holding the second telegram in the shift register until a certain point of time when the controller is able to service the receive buffer. In this way no data is lost or overwritten.

Deactivating the SSI (SIR=1) in mid–telegram will immediately stop the shift clock and latch the present contents of the shift register into the receive buffer. This can be used for clocking in a data telegram of less than 8 bits in length. Care should be taken to read out the final complete 8-bit data telegram of a multiple word message before deactivating the SSI (SIR=1) and terminating the reception. After termination, the shift register contents will overwrite the receive buffer.

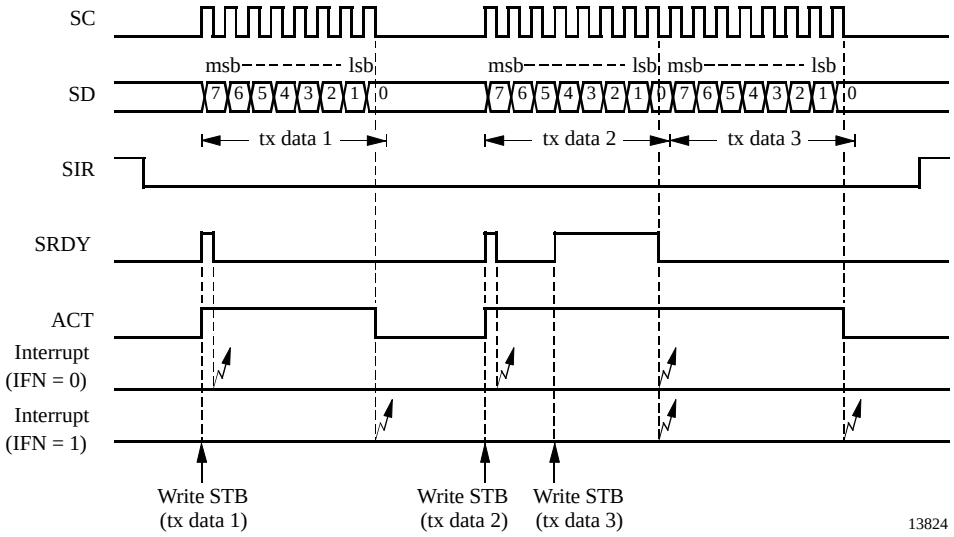

Figure 45. Example of 8-bit synchronous transmit operation

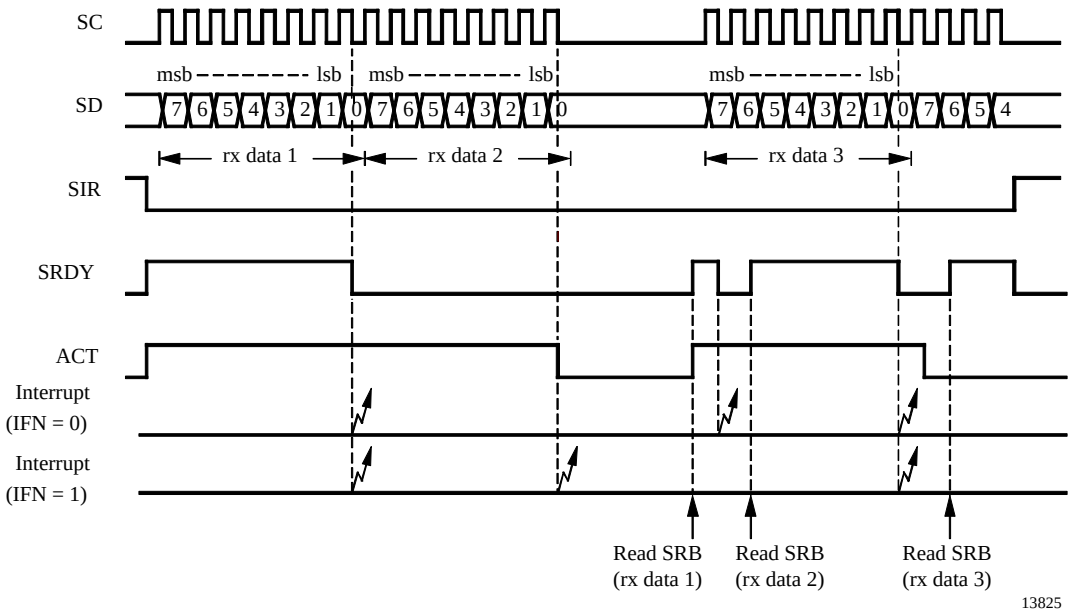

Figure 46. Example of 8-bit synchronous receive operation

9-bit Shift Mode (I^2C compatible)

In the 9-bit shift mode, the SSI is able to handle the I^2C protocol (described below). It always operates as an I^2C master device, i.e., SC is always generated and output by the SSI. Both the I^2C start and stop conditions are automatically generated whenever the SSI is activated or deactivated by the SIR–bit. In accordance with the I^2C protocol, the output data is always changed in the clock low phase and shifted in on the high phase.

Before activating the SSI (SIR=0) and commencing an I^2C dialog, the appropriate data direction for the first word must be set using the SDD control bit. The state of this bit controls the direction of the data port (BP43 or MCL_SD). Once started, the 8 data bits are, depending on the selected direction, either clocked into or out of the shift register. During the 9th clock period, the port direction is automatically switched over so that the corresponding acknowledge bit can be shifted out or read in. In transmit mode, the acknowledge bit received from the slave device is captured in the SSI Status Register (TACK) where it can be read by the controller. and in receive mode, the state of the acknowledge bit to be returned to the slave device is predetermined by the SSI Status Register (RACK).

Changing the directional mode (TX/RX) should not be performed during the transfer of an I^2C telegram. One should wait until the end of the telegram which can be detected using the SSI interrupt (IFN =1) or by interrogating the ACT status.

A 9-bit telegram, once started will always run to completion and will not be prematurely terminated by the SIR bit. So, if the SIR–bit is set to ‘1’ in mit telegram, the SSI will complete the current transfer and terminate the dialog with an I^2C stop condition.

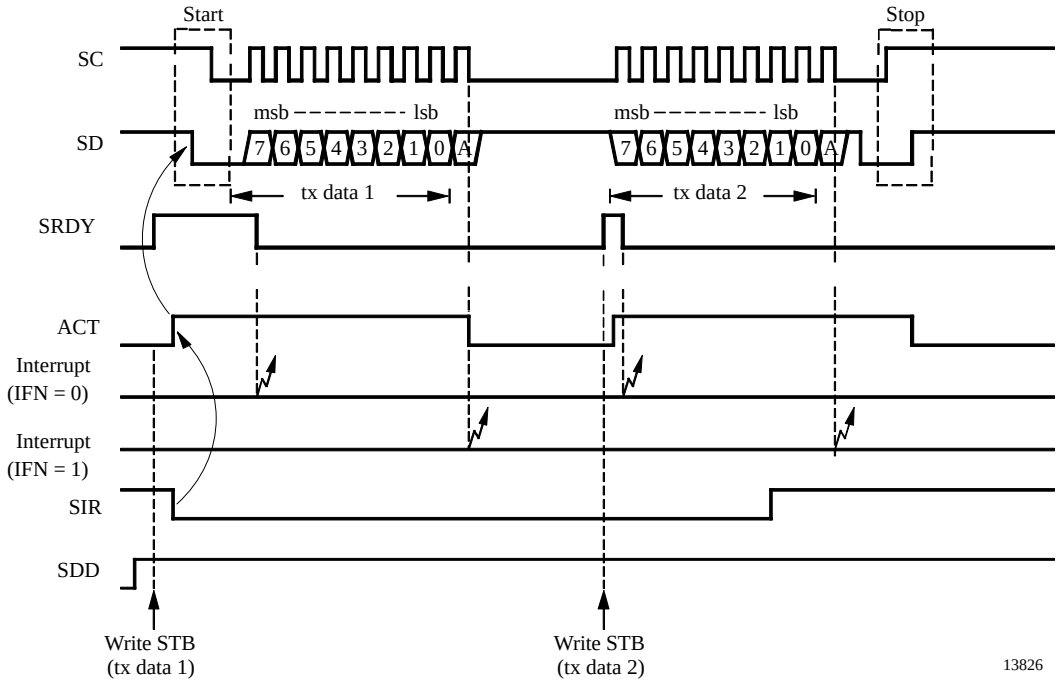

Figure 47. Example of I^2C transmit dialog

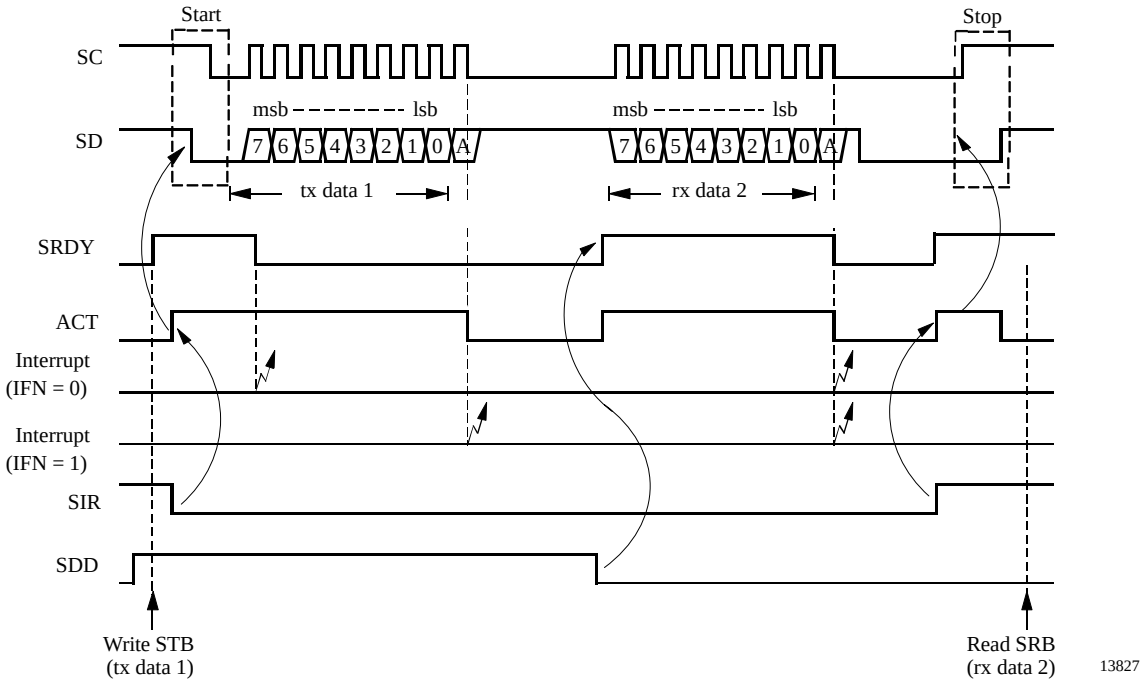

Figure 48. Example of I²C receive dialog

8-bit Pseudo I²C Mode

In this mode, the SSI exhibits all the typical I²C operational features except for the acknowledge-bit which is never expected or transmitted.

I²C Bus Protocol

The I²C protocol constitutes a simple 2-wire bidirectional communication highway via which devices can communicate control and data information. Although the I²C protocol can support multi-master bus configurations, the SSI, in I²C mode is intended for use purely as a master controller on a single master bus system. So all reference to multiple bus control and bus contention will be omitted at this point.

All data is packaged into 8-bit telegrams plus a trailing handshaking or acknowledge-bit. Normally the communication channel is opened with a so-called start condition, which initializes all devices connected to the bus. This is then followed by a data telegram, transmitted by the master controller device. This telegram usually contains an 8-bit address code to activate a single slave device connected onto the I²C bus. Each slave receives this address and compares it with it's own unique address. The addressed slave device, if ready to receive data will respond by pulling the SD line low during the 9th clock pulse. This represents a so-called I²C acknowledge. The controller on detecting this affirmative acknowledge then opens a connection to the required slave. Data can then be passed back and forth by the master controller, each 8-bit telegram being acknowledged by the respective recipient. The communication is finally closed by the master device and the slave device put back into standby by applying a stop condition onto the bus.

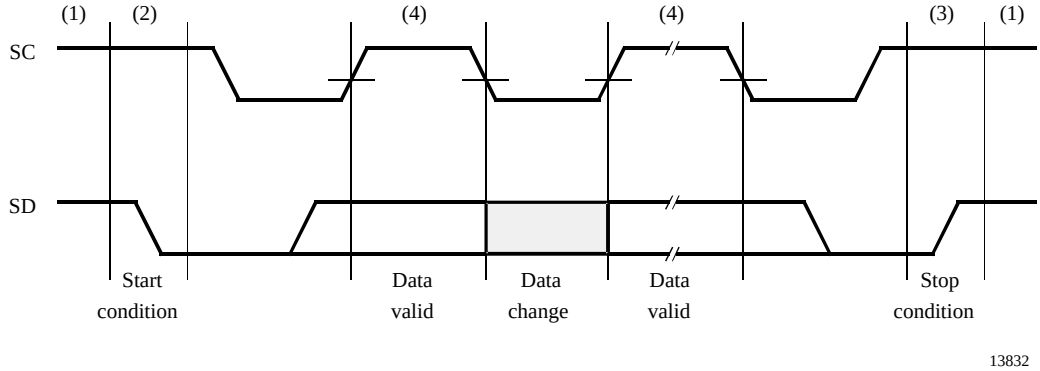

Figure 49. I²C bus protocol 1

Bus not busy (1)

Both data and clock lines remain HIGH.

Start data transfer (2)

A HIGH to LOW transition of the SD line while the clock (SC) is HIGH defines a START condition.

Stop data transfer (3)

A LOW to HIGH transition of the SD line while the clock (SC) is HIGH defines a STOP condition.

Data valid (4)

The state of the data line represents valid data when, after START condition, the data line is stable for the duration of the HIGH period of the clock signal.

Acknowledge

All address and data words are serially transmitted to and from device in eight–bit words. The receiving device returns a zero on the data line during the ninth clock cycle to acknowledge word receipt.

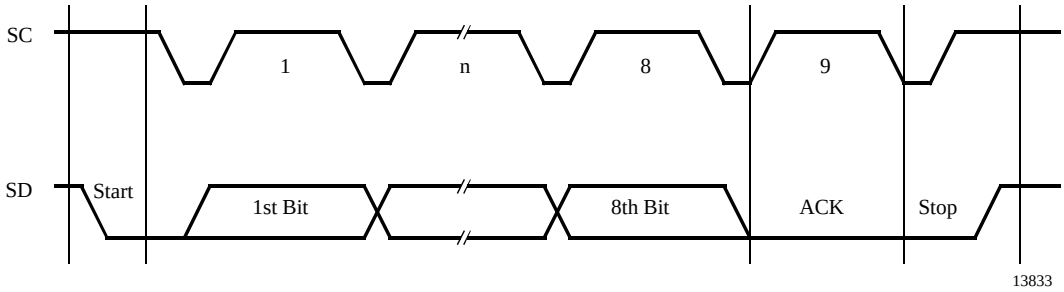

Figure 50. I²C bus protocol 2

SSI Interrupt

The SSI interrupt INT3 can be generated either by an SSI buffer register status (i.e., transmit buffer empty or receive buffer full) at the end of SSI data telegram or on the falling edge of the SC/SD pins on Port 4 (see P4CR). SSI interrupt selection is performed by the **I**nterrupt **F**unctio**N** control bit (IFN). The SSI interrupt is usually used to synchronize the software control of the SSI and inform the controller of the present SSI status. The Port 4 interrupts can be used together with the SSI or, if the SSI itself is not required, as additional external interrupt sources. In either case this interrupt is capable of waking the controller out of sleep mode.

To enable and select the SSI relevant interrupts use the SSI interrupt mask (SIM) and the Interrupt Function (IFN) while the Port 4 interrupts are enabled by setting appropriate control bits in P4CR register.

Modulation

If the shift register is used together with Timer 2 for modulation purposes, the 8-bit synchronous mode must be used. In this case, the unused Port 4 pins can be used as conventional bidirectional ports.

The modulation stage, if enabled, operates as soon as the SSI is activated (SIR=0) and ceases when deactivated (SIR=1).

Due to the byte-orientated data control, the SSI when running normally generates serial bit streams which are submultiples of 8 bits. An SSI output masking (OMSK) function permits, however, the generation of bit streams of any length. The OMSK signal is derived indirectly from the 4-bit prescaler of the Timer 2 and masks out a programmable number of unrequired trailing data bits during the shifting out of the final data word in the bit stream. The number of non-masked data bits is defined by the value pre-programmed in the prescaler compare register. To use output masking, the modulator stop mode bit (MSM) must be set to ’0’ before programming the final data word into the SSI transmit buffer. This in turn, enables shift clocks to the prescaler when this final word is shifted out. On reaching the compare value, the prescaler triggers the OMSK signal and all following data bits are blanked.

Internal 2-Wire Multi-Chip Link

Two additional on-chip pads (MCL_SC and MCL_SD) for the SC and the SD line can be used as chip-to-chip link for multi-chip applications. These pads can be activated by setting the MCL-bit in the SISC-register.

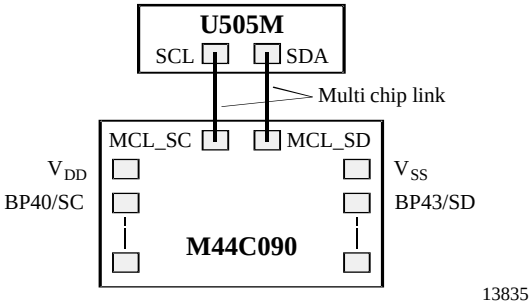

Figure 51. Multi-chip link

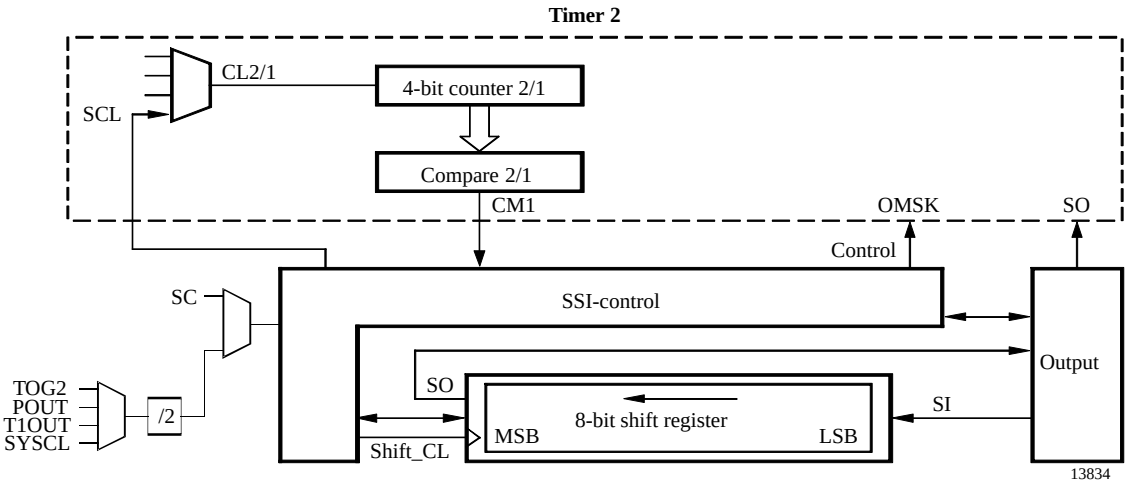

Figure 52. SSI output masking function

Serial Interface Registers

Serial Interface Control Register 1 (SIC1)

Auxiliary register address: ’9’hex

	Bit 3	Bit 2	Bit 1	Bit 0
SIC1	**SIR**	**SCD**	**SCS1**	**SCS0**

Reset value: 1111b

SIR **S**erial **I**nterface **R**eset
SIR = 1, SSI inactive
SIR = 0, SSI active

SCD **S**erial **C**lock **D**irection
SCD = 1, SC line used as output
SCD = 0, SC line used as input
Note: This bit has to be set to ’1’ during the I^2C mode

SCS1 **S**erial **C**lock source **S**elect bit **1**
SCS0 **S**erial **C**lock source **S**elect bit **0**

Note: with SCD = ’0’ the bits SCS1 and SCS0 are insignificant

SCS1	SCS0	Internal Clock for SSI
1	1	SYSCL / 2
1	0	T1OUT / 2
0	1	POUT / 2
0	0	TOG2 / 2

- In Transmit mode (SDD = 1) shifting starts only if the transmit buffer has been loaded (SRDY = 1).
- Setting SIR-bit loads the contents of the shift register into the receive buffer (synchronous 8-bit mode only).
- In I^2C modes, writing a 0 to SIR generates a start condition and writing a 1 generates a stop condition.

Serial Interface Control Register 2 (SIC2)

Auxiliary register address: ’A’hex

	Bit 3	Bit 2	Bit 1	Bit 0
SIC2	**MSM**	**SM1**	**SM0**	**SDD**

Reset value: 1111b

MSM **M**odular **S**top **M**ode
MSM = 1, modulator stop mode disabled (output masking off)
MSM = 0, modulator stop mode enabled (output masking on) – used in modulation modes for generating bit streams which are not sub-multiples of 8 bit.

SM1 **S**erial **M**ode control bit **1**
SM0 **S**erial **M**ode control bit **0**

Mode	SM1	SM0	SSI Mode
1	1	1	8-bit NRZ-Data changes with the rising edge of SC
2	1	0	8-bit NRZ-Data changes with the falling edge of SC
3	0	1	9-bit two-wire I^2C compatible
4	0	0	8-bit two-wire pseudo I^2C compatible (no acknowledge)

SDD **S**erial **D**ata **D**irection
SDD = 1, transmit mode – SD line used as output (transmit data). SRDY is set by a transmit buffer write access.
SDD = 0, receive mode – SD line used as input (receive data). SRDY is set by a receive buffer read access

Note: SDD controls port directional control and defines the reset function for the SRDY–flag

Serial Interface Status and Control Register (SISC)

Primary register address: ’A’hex

		Bit 3	Bit 2	Bit 1	Bit 0	
SISC	**write**	**MCL**	**RACK**	**SIM**	**IFN**	**Reset value: 1111b**
SISC	**read**	**– – –**	**TACK**	**ACT**	**SRDY**	**Reset value: xxxxb**

MCL **M**ulti-**C**hip **L**ink activation
MCL = 1, multi-chip link disabled. **This bit has to be set to ’0’ during transactions to/from EEPROM of the M44C890**
MCL = 0, connnects SC and SD additional to the internal multi-chip link pads

RACK **R**eceive **ACK**nowledge status/control bit for I^2C mode
RACK = 0, transmit acknowledge in next receive telegram
RACK = 1, transmit no acknowledge in last receive telegram

TACK **T**ransmit **ACK**nowledge status/control bit for I^2C mode
TACK = 0, acknowledge received in last transmit telegram
TACK = 1, no acknowledge received in last transmit telegram

SIM **S**erial **I**nterrupt **M**ask
SIM = 1, disable interrupts
SIM = 0, enable serial interrupt. An interrupt is generated.

IFN **I**nterrupt **F**u**N**ction
IFN = 1, the serial interrupt is generated at the end of telegram
IFN = 0, the serial interrupt is generated when the SRDY goes low (i.e., buffer becomes empty/full in transmit/receive mode)

SRDY **S**erial interface buffer **R**ea**DY** status flag
SRDY = 1, in receive mode: receive buffer empty
in transmit mode: transmit buffer full
SRDY = 0, in receive mode: receive buffer full
in transmit mode: transmit buffer empty

ACT Transmission **ACT**ive status flag
ACT = 1, transmission is active, i.e., serial data transfer. Stop or start conditions are currently in progress.
ACT = 0, transmission is inactive

Serial Transmit Buffer (STB) – Byte Write

Primary register address: ’9’hex

STB	**First write cycle**	**Bit 3**	**Bit 2**	**Bit 1**	**Bit 0**	**Reset value: xxxxb**
	Second write cycle	**Bit 7**	**Bit 6**	**Bit 5**	**Bit 4**	**Reset value: xxxxb**

The STB is the transmit buffer of the SSI. The SSI transfers the transmit buffer into the shift register and starts shifting with the most significant bit.

Serial Receive Buffer (SRB) – Byte Read

Primary register address: ’9’hex

SRB	**First read cycle**	**Bit 7**	**Bit 6**	**Bit 5**	**Bit 4**	**Reset value: xxxxb**
	Second read cycle	**Bit 3**	**Bit 2**	**Bit 1**	**Bit 0**	**Reset value: xxxxb**

The SRB is the receive buffer of the SSI. The shift register clocks serial data in (most significant bit first) and loads content into the receive buffer when complete telegram has been received.

3.3.4 Combination Modes

The UTCM consists of one timer (Timer 2) and a serial interface. There is a multitude of modes in which the timers and serial interface can work together.

The 8-bit wide serial interface operates as shift register for modulation. The modulator units work together with the timer and shift the data bits into or out of the shift register.

Combination Mode Timer 2 and SSI

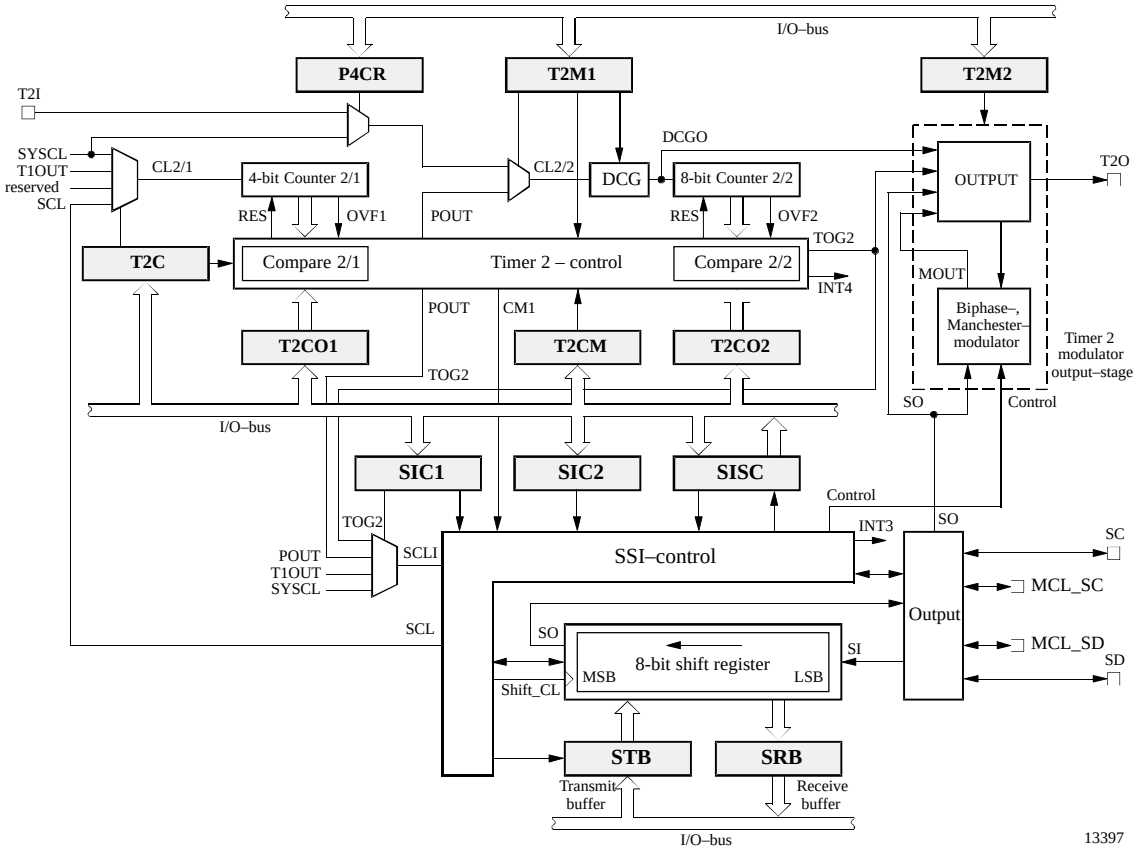

Figure 53. Combination Timer 2 and SSI

Combination mode 1: Burst modulation

SSI mode 1: 8-bit NRZ and internal data SO output to the Timer 2 modulator stage

Timer 2 mode 1, 2, 3 or 4: 8-bit compare counter with 4-bit programmable prescaler and DCG
Timer 2 output mode 3: Duty-cycle burst generator

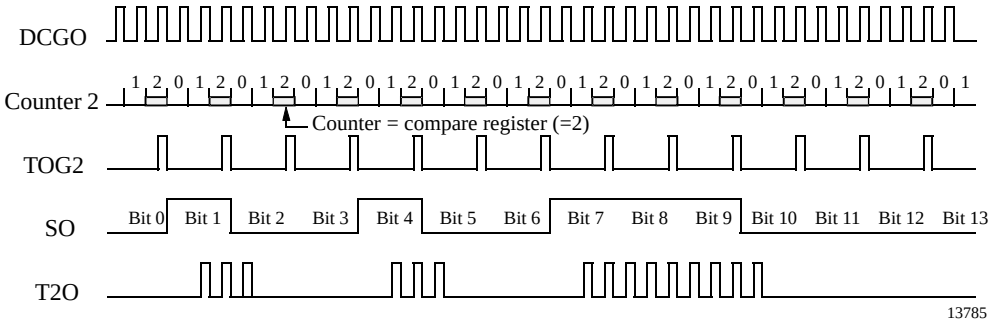

Figure 54. Carrier frequency burst modulation with the SSI internal data output

Combination mode 2: Biphase modulation 1

SSI mode 1: 8-bit shift register internal data output (SO) to the Timer 2 modulator stage

Timer 2 mode 1, 2, 3 or 4: 8-bit compare counter with 4-bit programmable prescaler
Timer 2 output mode 4: The modulator 2 of Timer 2 modulates the SSI internal data output to Biphase code

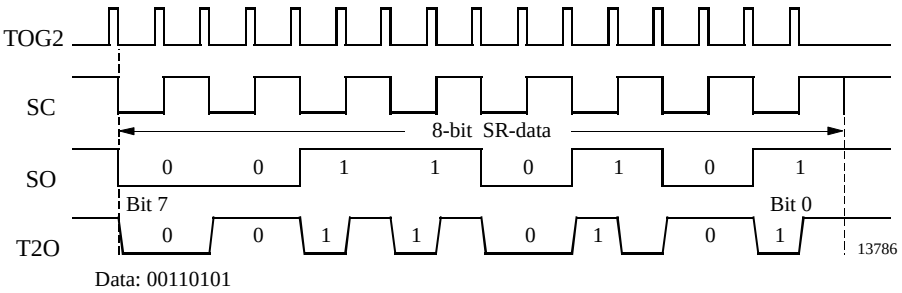

Figure 55. Biphase modulation 1

Combination mode 3: Manchester modulation 1

SSI mode 1: 8-bit shift register internal data output (SO) to the Timer 2 modulator stage

Timer 2 mode 1, 2, 3 or 4: 8-bit compare counter with 4-bit programmable prescaler
Timer 2 output mode 5: The modulator 2 of Timer 2 modulates the SSI internal data output to Manchester code

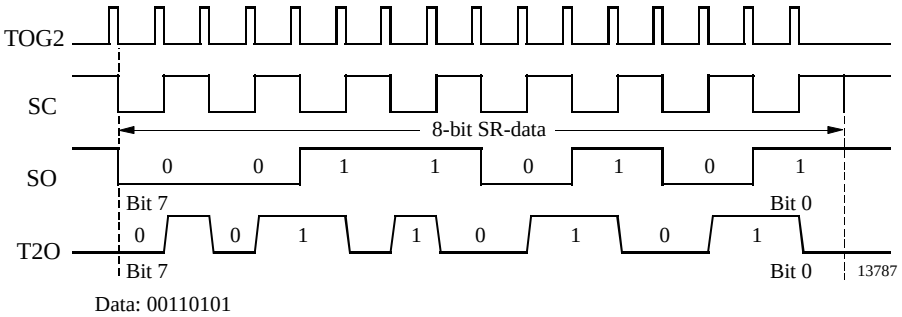

Figure 56. Manchester modulation 1

Combination mode 4: Manchester modulation 2

SSI mode 1:	8-bit shift register internal data output (SO) to the Timer 2 modulator stage
Timer 2 mode 3:	8-bit compare counter and 4-bit prescaler
Timer 2 output mode 5:	The modulator 2 of Timer 2 modulates the SSI data output to Manchester code

The 4-bit stage can be used as prescaler for the SSI to generate the stop signal for modulator 2. The SSI has a special mode to supply the prescaler with the shift-clock. The control output signal (OMSK) of the SSI is used as stop signal for the modulator. This is an example for a 12-bit Manchester telegram:

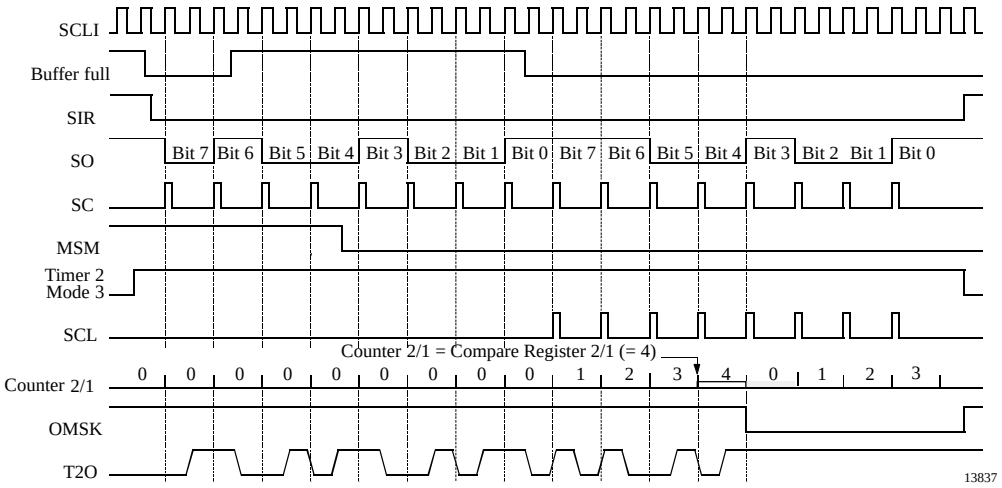

Figure 57. Manchester modulation 2

Combination mode 5: Biphase modulation 2

SSI mode 1:	8-bit shift register internal data output (SO) to the Timer 2 modulator stage
Timer 2 mode 3:	8-bit compare counter and 4-bit prescaler
Timer 2 output mode 4:	The modulator 2 of Timer 2 modulates the SSI data output to Biphase code

The 4-bit stage can be used as prescaler for the SSI to generate the stop signal for modulator 2. The SSI has a special mode to supply the prescaler via the shift-clock. The control output signal (OMSK) of the SSI is used as stop signal for the modulator. This is an example for a 13-bit Biphase telegram:

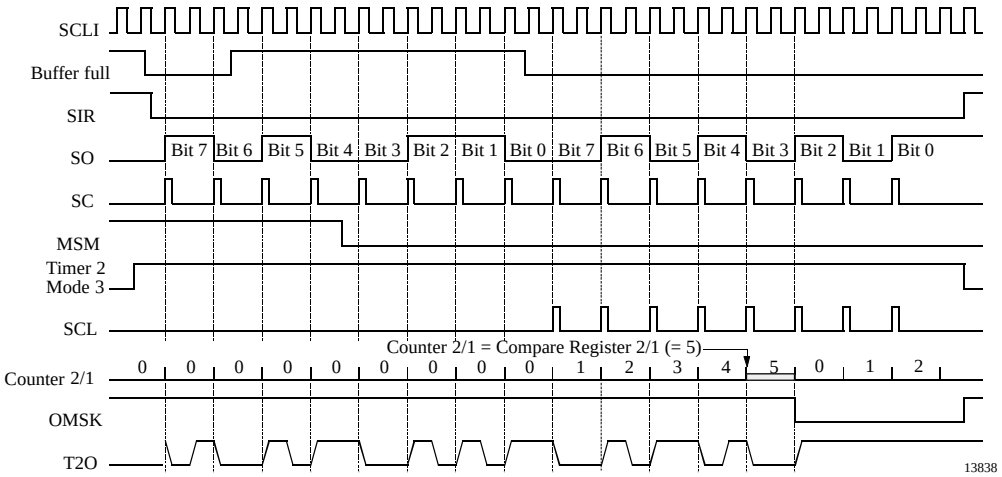

Figure 58. Biphase modulation

4 M44C890

The M44C890 is a multi-chip product which offers a combination of a MARC4-based microcontroller and a serial EEPROM data memory in a single package. As microcontroller the M44C090 is used and as serial EEPROM the U505M. Two internal lines can be used as chip-to-chip link in a single package. The maximum internal data communication frequency between the M44C090 and the U505M over the chip link (MCL_SC and MCL_SD) is f_{SC_MCL} = 500 kHZ.

The microcontroller and the EEPROM portions of this multi-chip device are equivalent to their respective individual component chips, except for the electrical specification.

Internal 2-wire multi-chip link

Two additional on-chip pads (MCL_SC and MCL_SD) for the SC and the SD line can be used as chip-to-chip link for multi-chip applications. These pads can be activated by setting the MCL-bit in the SISC-register.

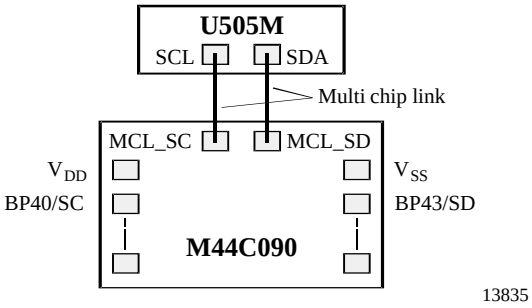

Figure 59. Link between M44C090 and U505M

4.1 U505M EEPROM

The U505M is a 512-bit EEPROM internally organized 32 x 16 bit. The programming voltage as well as the write-cycle timing is generated on-chip. The U505M features a serial interface allowing operation on a simple two-wire bus with an I^2C-compatible protocol. Its low power consumption makes it well suited for battery applications.

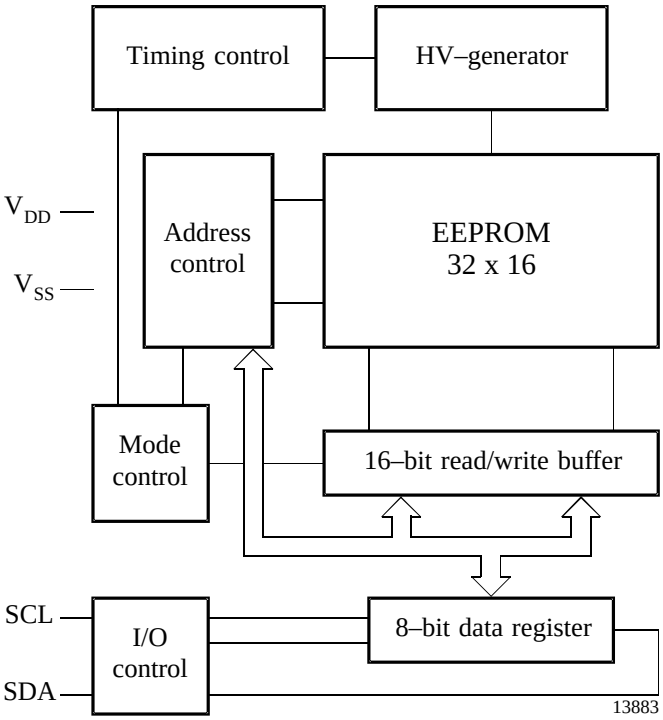

Figure 60. Block diagram EEPROM

4.1.1 Serial Interface

The U505M has an I^{2}C-like two-wire serial interface to the microcontroller for read and write accesses to the EEPROM. The U505M is considered to be a slave in all these applications. That means, the controller has to be the master that initiates the data transfer and provides the clock for transmit and receive operations.

The serial interface is controlled by the M44C890 microcontroller which generates the serial clock and controls the access via the SCL-line and SDA-line. SCL is used to clock the data into and out of the device. SDA is a bidirectional line that is used to transfer data into and out of the device. The following protocol is used for the data transfers.

Serial Protocol

- Data states on the SDA-line changing only while SCL is low.
- Changes on the SDA-line while SCL is high are interpreted as START or STOP condition.
- A START condition is defined as high to low transition on the SDA-line while the SCL-line is high.
- A STOP condition is defined as low to high transition on the SDA-line while the SCL-line is high.
- Each data transfer must be initialized with a START condition and terminated with a STOP condition. The START condition wakes the device from standby mode and the STOP condition returns the device to standby mode.
- A receiving device generates an acknowledge (A) after the reception of each byte. This requires an additional clock pulse, generated by the master. If the reception was successful the receiving master or slave device pulls down the SDA-line during that clock cycle. If an acknowledge is not detected (N) by the interface in transmit mode, it will terminate further data transmissions and go into receive mode. A master device must finish its read operation by a non-acknowledge and then send a stop condition to bring the device into a known state.

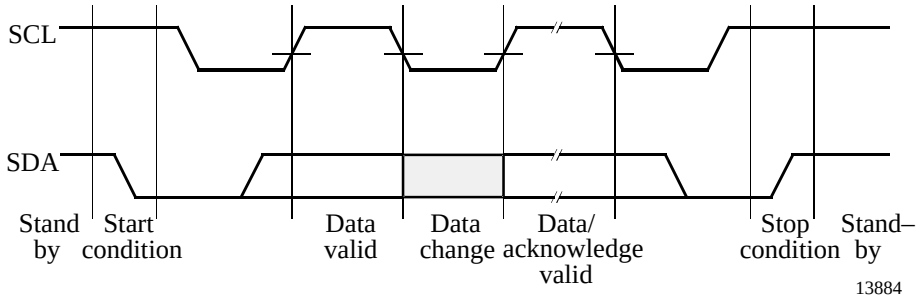

Figure 61. I^{2}C protocol

- Before the START condition and after the STOP condition the device is in stand-by mode and the SDA line is switched as input with pull-up resistor.
- The control byte that follows the START condition determines the following operation. It consists of the 5-bit row address, 2 mode control bits and the READ / NWRITE bit that is used to control the direction of the following transfer. A ”0” defines a write access and a ”1” a read access.

- **Control byte format:**

	EEPROM address					Mode control bits		Read/ NWrite	
Start	A4	A3	A2	A1	A0	C1	C0	R/NW	Ackn

- **Control byte format:**

Start	Control byte	Ackn	Data byte	Ackn	Data byte	Ackn	Stop

4.1.2 EEPROM

The EEPROM has a size of 512 bits and is organized as 32 x 16-bit matrix. To read and write data to and from the EEPROM the serial interface must be used. The interface supports one and two byte write accesses and one to n-byte read accesses to the EEPROM.

EEPROM – Operating Modes

The operating modes of the EEPROM are defined via the control byte. The control byte contains the row address, the mode control bits and the read/not-write bit that is used to control the direction of the following transfer. A ”0” defines a write access and a ”1” a read access. The five address bits select one of the 32 rows of the EEPROM memory to be accessed. For all accesses the complete 16-bit word of the selected row is loaded into a buffer. The buffer must be read or overwritten via the serial interface. The two mode control bits C1 and C2 define in which order the accesses to the buffer are performed: High byte – low byte or low byte – high byte. The EEPROM also supports autoincrement and autodecrement read operations. After sending the start address with the corresponding mode, consecutive memory cells can be read row by row without transmission of the row addresses.

Two special control bytes enable the complete initialization of EEPROM with ”0” or with ”1.

Write Operations

The EEPROM permits 8-bit and 16-bit write operations. A write access starts with the START condition followed by a write control byte and one or two data bytes from the master. It is completed via the STOP condition from the master after the acknowledge cycle.

The programming cycle consists of an erase cycle (write ”zeros”) and the write cycle (write ”ones”). Both cycles together take about 10 ms.

Acknowledge Polling

If the EEPROM is busy with an internal write cycle, all inputs are disabled and the EEPROM will not acknowledge until the write cycle is finished. This can be used to detect the end of the write cycle. The master must perform acknowledge polling by sending a start condition followed by the control byte. If the device is still busy with the write cycle, it will not return an acknowledge and the master has to generate a stop condition or perform further acknowledge polling sequences. If the cycle is complete, it returns an acknowledge and the master can proceed with the next read or write cycle.

Write One Data Byte

Start	Control byte	A	Data byte 1	A	Stop

Write Two Data Bytes

Start	Control byte	A	Data byte 1	A	Data byte 2	A	Stop

Write Control Byte Only

Start	Control byte	A	Stop

Write Control Bytes

Write low byte first

MSB							LSB
A4	A3	A2	A1	A0	C1	C0	R/NW
Row address					0	1	0

Byte order

LB(R)	HB(R)

Write high byte first

MSB							LSB
A4	A3	A2	A1	A0	C1	C0	R/NW
Row address					1	0	0

Byte order

HB(R)	LB(R)

A –> acknowledge; HB: high byte; LB: low byte; R: row address

Read Operations

The EEPROM allows byte-, word- and current address read operations. The read operations are initiated in the same way as write operations. Every read access is initiated by sending the START condition followed by the control byte which contains the address and the read mode. After the device receives a read command it returns an acknowledge, loads the addressed word into the read\write buffer and sends the selected data byte to the master. The master has to acknowledge the received byte if it wants to proceed the read operation. If two bytes are read out from the buffer the device increments respectively decrements the word address automatically and loads the buffer with the next word. The read mode bits determines if the low or high byte is read first from the buffer and if the word address is incremented or decremented for the next read access. If the memory address limit is reached, the data word address will ”roll over” and the sequential read will continue. The master can terminate the read operation after every byte by not responding with an acknowledge (N) and by issuing a stop condition.

Read One Data Byte

Start	Control byte	A	Data byte 1	N	Stop

Read Two Data Bytes

Start	Control byte	A	Data byte 1	A	Data byte 2	N	Stop

Read n Data Bytes

Start	Control byte	A	Data byte 1	A	Data byte 2	A	– – – –	Data byte n	N	Stop

Read Control Bytes

Read low byte first, address increment

MSB							LSB
A4	A3	A2	A1	A0	C1	C0	R/NW
Row address					0	1	1

Byte order

LB(R)	HB(R)	LB(R+1)	HB(R+1)	– – –	LB(R+n)	HB(R+n)

Read high byte first, addr. decrement

MSB							LSB
A4	A3	A2	A1	A0	C1	C0	R/NW
Row address					1	0	1

Byte order

HB(R)	LB(R)	HB(R–1)	LB(R–1)	– – –	HB(R–n)	LB(R–n)

A –> acknowledge, N –> no acknowledge; HB: high byte; LB: low byte, R: row address

Initialization after a Reset Condition

The EEPROM with the serial interface has its own reset circuitry. In systems with microcontrollers that have their own reset circuitry for power on reset, watchdog reset or brown-out reset, it may be necessary to bring the U505M into a known state independent of its internal reset. This is performed by writing:

Start	Control byte	A	Data byte 1	N	Stop

to the serial interface. If the U505M acknowledges this sequence it is in a defined state. Maybe it is necessary to perform this sequence twice.

5 Electrical Characteristics

5.1 Absolute Maximum Ratings

Voltages are given relative to V_{SS}

Parameters	Symbol	Value	Unit
Supply voltage	V_{DD}	–0.3 to + 6.5	V
Input voltage (on any pin)	V_{IN}	V_{SS} –0.3 $\leq V_{IN} \leq V_{DD}$ +0.3	V
Output short circuit duration	t_{short}	indefinite	s
Operating temperature range	T_{amb}	–40 to +85	°C
Storage temperature range	T_{stg}	–40 to +130	°C
Thermal resistance (SSO20)	R_{thJA}	140	K/W
Soldering temperature (t ≤ 10 s)	T_{sld}	260	°C

Stresses greater than those listed under absolute maximum ratings may cause permanent damage to the device. This is a stress rating only and functional operation of the device at any condition above those indicated in the operational section of this specification is not implied. Exposure to absolute maximum rating condition for an extended period may affect device reliability. All inputs and outputs are protected against high electrostatic voltages or electric fields. However, precautions to minimize the build-up of electrostatic charges during handling are recommended. Reliability of operation is enhanced if unused inputs are connected to an appropriate logic voltage level (e.g. V_{DD}).

5.2 DC Operating Characteristics

V_{SS} = 0 V, T_{amb} = –40 to 85°C unless otherwise specified.

Parameters	Test Conditions / Pins	Symbol	Min.	Typ.	Max.	Unit
Power supply						
Operating voltage at V_{DD}		V_{DD}	V_{POR}		6.5	V
Active current CPU active	f_{SYSCL} = 1 MHz V_{DD} = 1.8 V V_{DD} = 3.0 V V_{DD} = 6.5 V	I_{DD}		 150 220 600	 350	 µA µA µA
Power down current (CPU sleep, RC oscillator active, 4-MHz quartz-osc. active)	f_{SYSCL} = 1 MHz V_{DD} = 1.8 V V_{DD} = 3.0 V V_{DD} = 6.5 V	I_{PD}		 30 50 150	 100	 µA µA µA
Sleep current (CPU sleep, 32-kHz quartz-osc. active 4-MHz quartz-osc. inactive)	V_{DD} = 1.8 V V_{DD} = 3.0 V V_{DD} = 6.5 V	I_{Sleep}		0.4 0.6 0.8	 1.3 1.8	µA µA µA
Sleep current (CPU sleep, 32-kHz quartz-osc. inactive 4-MHz quartz-osc. inactive)	V_{DD} = 1.8 V for M44C090 V_{DD} = 3.0 V for M44C090 V_{DD} = 6.5 V for M44C090 V_{DD} = 6.5 V for M44C890	I_{Sleep}		0.1 0.3 0.5 0.6	 0.5 0.8 1.0	µA µA µA µA
Pin capacitance	Any pin to V_{SS}	C_L		7	10	pF

V_{SS} = 0 V, T_{amb} = –40 to +85°C unless otherwise specified.

Parameters	Test Conditions / Pins	Symbol	Min.	Typ.	Max.	Unit
Power-on reset threshold voltage						
POR threshold voltage	BOT = 1	V_{POR}	1.6	1.7	1.8	V
POR threshold voltage	BOT = 0	V_{POR}	1.75	1.9	2.05	V
POR hysteresis		V_{POR}		50		mV
Voltage monitor threshold voltage						
VM high threshold voltage	V_{DD} > VM, VMS = 1	V_{MThh}		3.0	3.25	V
VM high threshold voltage	V_{DD} < VM, VMS = 0	V_{MThh}	2.8	3.0		V
VM middle thresh. voltage	V_{DD} > VM, VMS = 1	V_{MThm}		2.6	2.8	V
VM middle thresh. voltage	V_{DD} < VM, VMS = 0	V_{MThm}	2.4	2.6		V
VM low threshold voltage	V_{DD} > VM, VMS = 1	V_{MThl}		2.2	2.4	V
VM low threshold voltage	V_{DD} < VM, VMS = 0	V_{MThl}	2.0	2.2		V
External input voltage						
VMI	VMI > VBG, VMS = 1	V_{VMI}		1.3	1.4	V
VMI	VMI < VBG, VMS = 0	V_{VMI}	1.2	1.3		V

All Bidirectional Ports

V_{SS} = 0 V, T_{amb} = –40 to 85°C unless otherwise specified.

Parameters	Test Conditions / Pins	Symbol	Min.	Typ.	Max.	Unit
Input voltage LOW	V_{DD} = 1.8 to 6.5 V	V_{IL}	V_{SS}		0.2*V_{DD}	V
Input voltage HIGH	V_{DD} = 1.8 to 6.5 V	V_{IH}	0.8* V_{DD}		V_{DD}	V
Input LOW current (switched pull-up)	V_{DD} = 2.0 V, V_{DD} = 3.0 V, V_{IL}= V_{SS} V_{DD} = 6.5 V	I_{IL}	–2 –10 –50	–4 –20 –100	–12 –40 –200	µA µA µA
Input HIGH current (switched pull-down)	V_{DD} = 2.0 V, V_{DD} = 3.0 V, V_{IH} = V_{DD} V_{DD} = 6.5 V	I_{IH}	2 10 50	4 20 100	12 40 200	µA µA µA
Input LOW current (static pull-up)	V_{DD} = 2.0 V, V_{DD} = 3.0 V, V_{IL}= V_{SS} V_{DD} = 6.5 V	I_{IL}	–20 –80 –300	–50 –160 –600	–100 –320 –1200	µA µA µA
Input LOW current (static pull-down)	V_{DD} = 2.0 V, V_{DD} = 3.0 V, V_{IH}= V_{DD} V_{DD} = 6.5 V	I_{IH}	20 80 300	50 160 600	100 320 1200	µA µA µA
Input leakage current	V_{IL}= V_{SS}	I_{IL}			100	nA
Input leakage current	V_{IH}= V_{DD}	I_{IH}			100	nA
Output LOW current	V_{OL} = 0.2 × V_{DD} V_{DD} = 2.0 V V_{DD} = 3.0 V, V_{DD} = 6.5 V	I_{OL}	0.6 3 8	1.2 5.0 15	2.5 8 22	mA mA mA
Output HIGH current	V_{OH} = 0.8 × V_{DD} V_{DD} = 2.0 V V_{DD} = 3.0 V, V_{DD} = 6.5 V	I_{OH}	–0.6 –3 –8	–1.2 –5 –16	–2.5 –8 –24	mA mA mA

Note: The Pin BP20/NTE has a static pull-up resistor during the reset-phase of the microcontroller

5.3 AC Characteristics

Operation Cycle Time

V_{SS} = 0 V

Parameters	Test Conditions / Pins	Symbol	Min.	Typ.	Max.	Unit
System clock cycle	V_{DD} = 1.8 to 6.5 V T_{amb} = –40 to 85°C	t_{SYSCL}	500		2000	ns
	V_{DD} = 2.4 to 6.5 V T_{amb} = –40 to 85°C	t_{SYSCL}	250		2000	ns

Supply voltage V_{DD} = 1.8 to 6.5 V, V_{SS} = 0 V, T_{amb} = 25°C unless otherwise specified.

Parameters	Test Conditions / Pins	Symbol	Min.	Typ.	Max.	Unit
Timer 2 input timing Pin T2I						
Timer 2 input clock		f_{T2I}			5	MHz
Timer 2 input LOW time	Rise / fall time < 10 ns	t_{T2IL}	100			ns
Timer 2 input HIGH time	Rise / fall time < 10 ns	t_{T2IH}	100			ns
Interrupt request input timing						
Int. request LOW time	Rise / fall time < 10 ns	t_{IRL}	100			ns
Int. request HIGH time	Rise / fall time < 10 ns	t_{IRH}	100			ns
External system clock						
EXSCL at OSC1 input	EMC = EN Rise / fall time < 10 ns	f_{EXSCL}	0.5		4	MHz
EXSCL at OSC1 input	EMC = DI Rise / fall time < 10 ns	f_{EXSCL}	0.02		4	MHz
Input HIGH time	Rise / fall time < 10 ns	t_{IH}	0.1			µs
Reset timing						
Power-on reset time	$V_{DD} > V_{POR}$	t_{POR}		1.5	5	ms
RC oscillator 1						
Frequency		f_{RcOut1}		3.8		MHz
Stability	V_{DD} = 2.0 to 6.5 V T_{amb} = –40 to 85°C	Δf/f			± 50	%
RC oscillator 2 – external resistor						
Frequency	R_{ext} = 170 kΩ	f_{RcOut2}		4		MHz
Stability	V_{DD} = 2.0 to 6.5 V T_{amb} = –40 to 85°C	Δf/f			± 15	%
Stabilization time		t_S			10	µs
4-MHz crystal oscillator (operating range 2.2 V to 6.5 V)						
Frequency		f_X		4		MHz
Start-up time		t_{SQ}		5		ms
Stability		Δf/f	–10		10	ppm

Parameters	Test Conditions / Pins	Symbol	Min.	Typ.	Max.	Unit
32-kHz crystal oscillator (operating range 2.0 V to 6.5 V)						
Frequency		f_X		32.768		kHz
Start-up time		t_{SQ}		0.5		s
Stability		Δf/f	–10		10	ppm
External 32-kHz crystal parameters						
Crystal frequency		f_X		32.768		kHz
Serial resistance		RS		30	50	kΩ
Static capacitance		C0		1.5		pF
Dynamic capacitance		C1		3		fF
External 4-MHz crystal parameters						
Crystal frequency		f_X		4.0		MHz
Serial resistance		RS		40	150	Ω
Static capacitance		C0		1.4	3	pF
Dynamic capacitance		C1		3		fF
External 4-MHz ceramic resonator parameters						
Frequency		f_X		4.0		MHz
Serial resistance		RS		8	20	Ω
Static capacitance		C0		36	45	pF
Dynamic capacitance		C1		4.4		fF

Crystal Characteristics

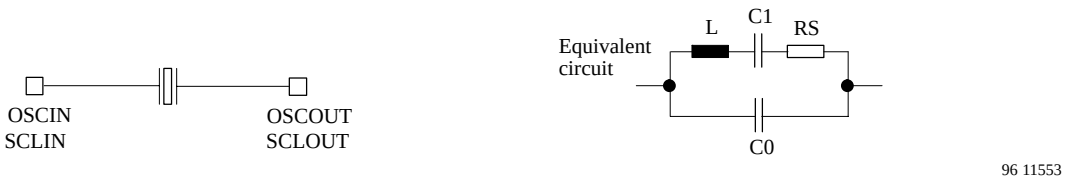

Figure 62. Crystal equivalent circuit

Supply voltage V_{DD} = 1.8 to 6.5 V, V_{SS} = 0 V, T_{amb} = 25°C unless otherwise specified.

Parameters	Test Conditions / Pins	Symbol	Min.	Typ.	Max.	Unit
EEPROM						
Operating current during erase/write cycle		I_{WR}		600	1300	µA
Endurance	Erase- / write-cycles	E_D	500,000	1,000,000		Cycles
Data erase/write cycle time	for 16-bit access	t_{DEW}		9	12	ms
Data retension time		t_{DR}	10			years
Power-up to read operation		t_{PUR}			0.2	ms
Power-up to write operation		t_{PUW}			0.2	ms
Serial interface						
SCL clock frequency		f_{SC_MCL}		100	500	kHz

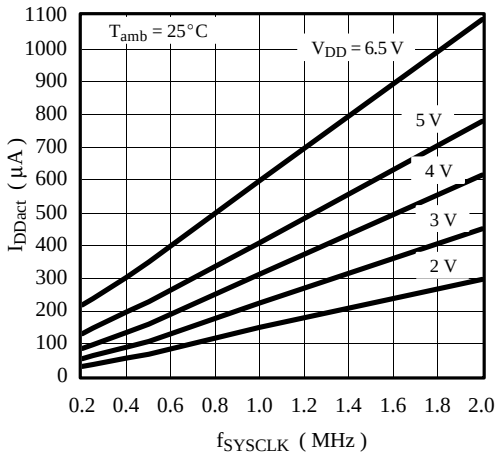

Figure 63. Active supply current vs. frequency

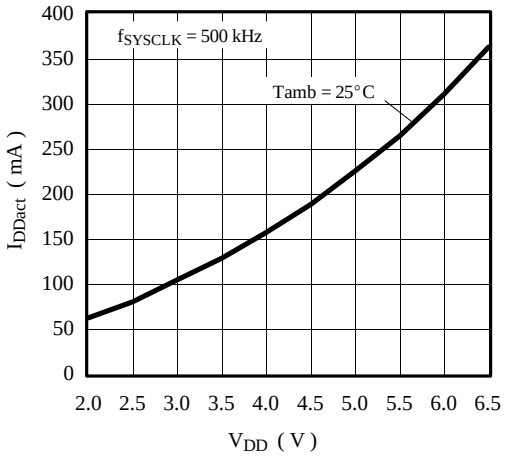

Figure 66. Active supply current vs. V_{DD}

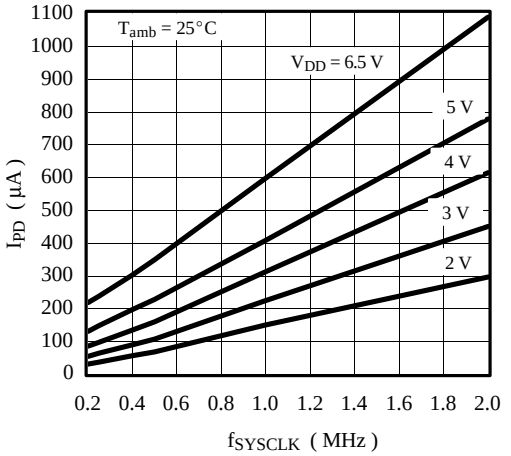

Figure 64. Power-down supply current vs. frequency

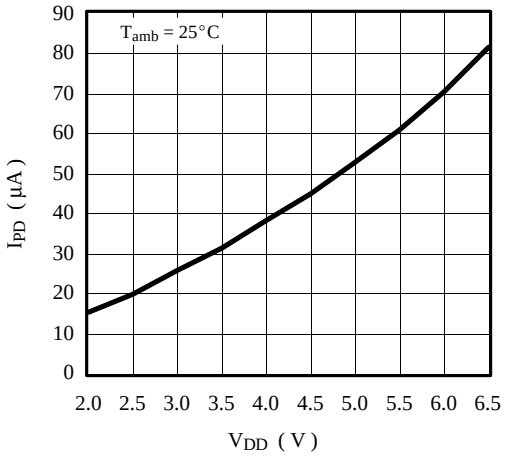

Figure 67. Power-down supply current vs. V_{DD}

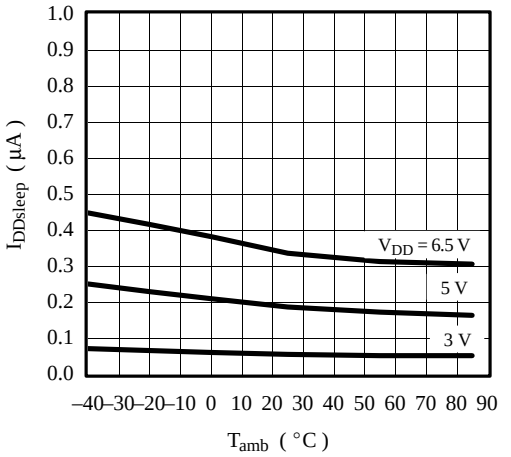

Figure 65. Sleep current vs. T_{amb}
M44C090

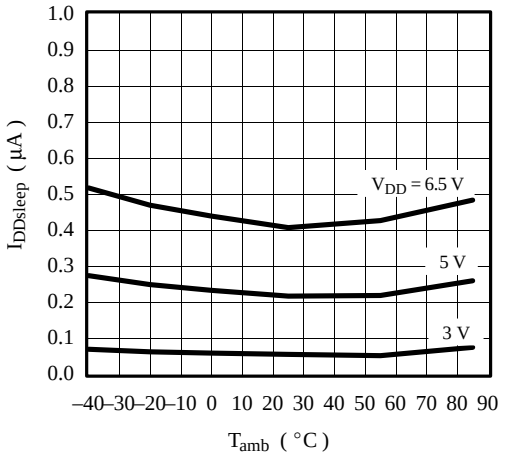

Figure 68. Sleep current vs. T_{amb}
M44C890

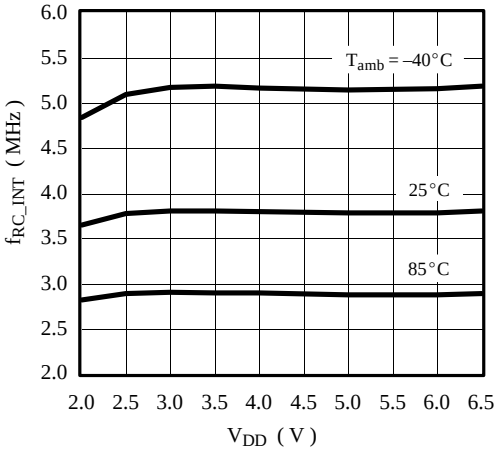

Figure 69. Internal RC frequency vs. V_{DD}
M44C090

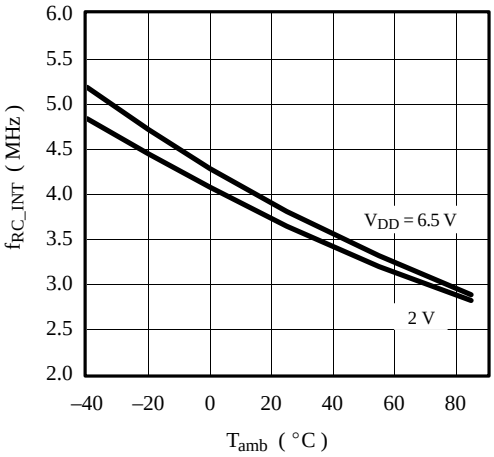

Figure 72. Internal RC frequency vs. T_{amb}
M44C090

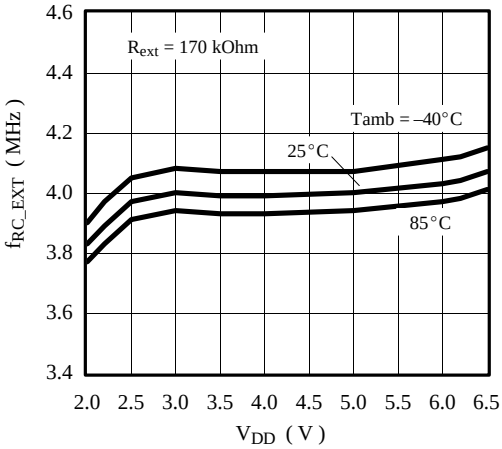

Figure 70. External RC frequency vs. V_{DD}

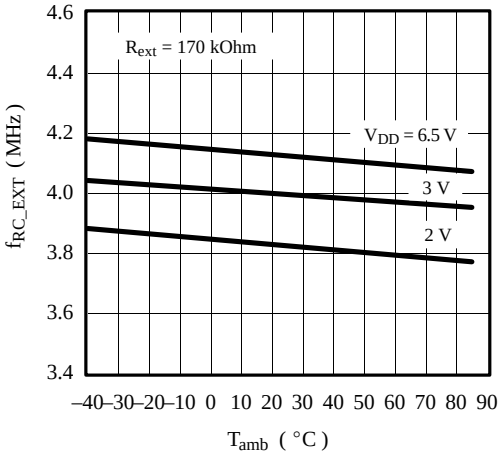

Figure 73. External RC frequency vs. T_{amb}

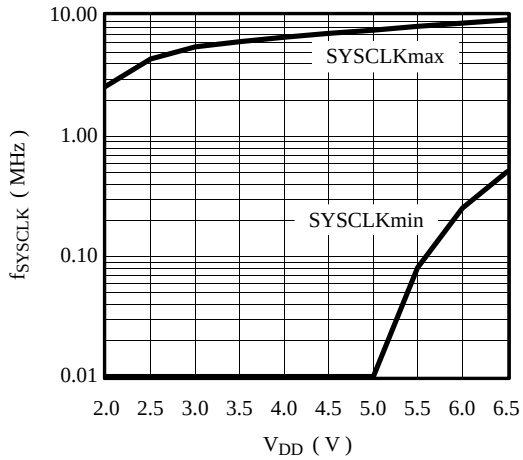

Figure 71. System clock vs. V_{DD}

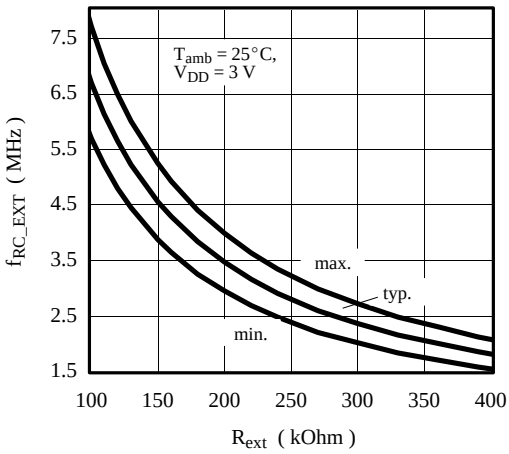

Figure 74. External RC frequency vs. R_{ext}

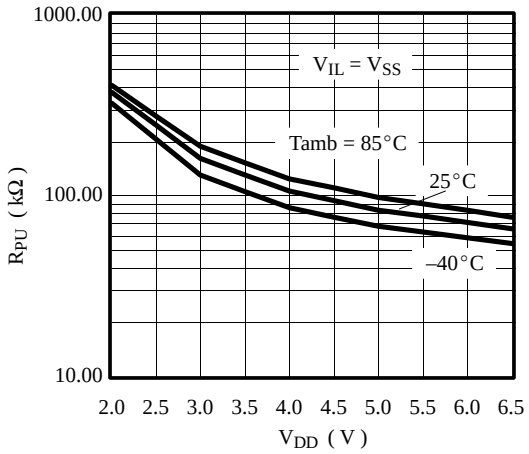

Figure 75. Pull-up resistor vs. V_{DD}

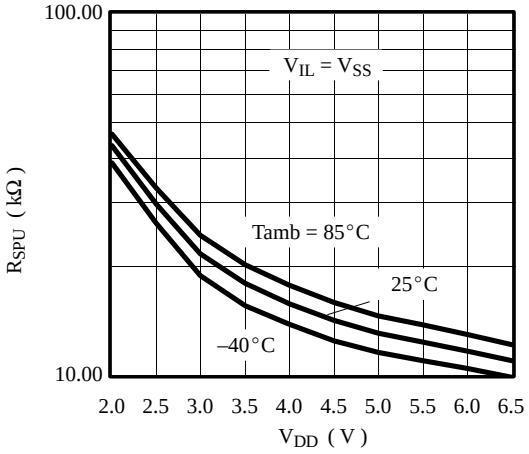

Figure 76. Strong pull-up resistor vs. V_{DD}

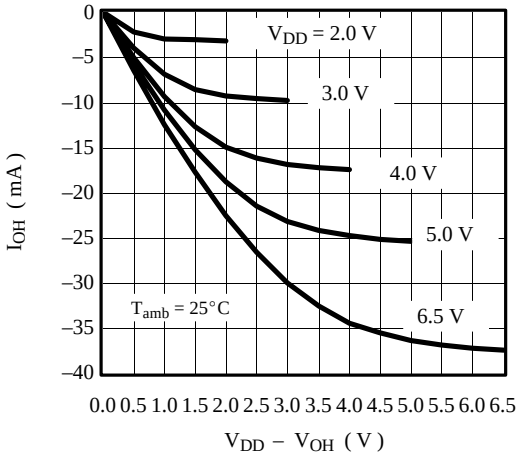

Figure 77. Output high current vs. VDD – output high voltage

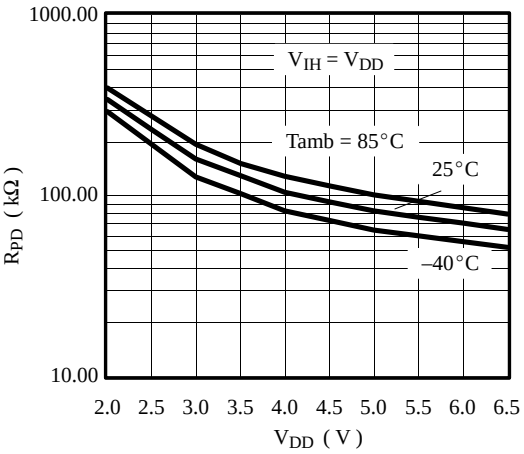

Figure 78. Pull-down resistor vs. V_{DD}

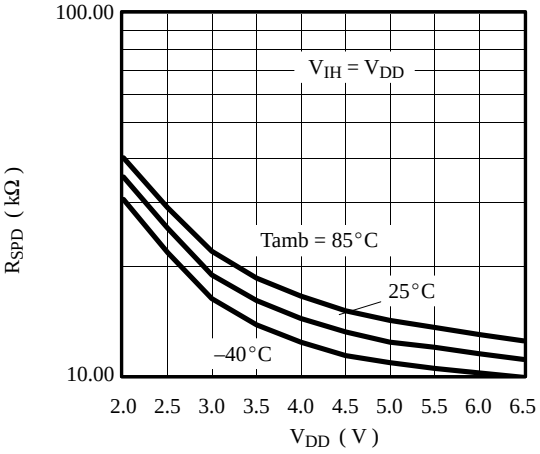

Figure 79. Strong pull-down resistor vs. V_{DD}

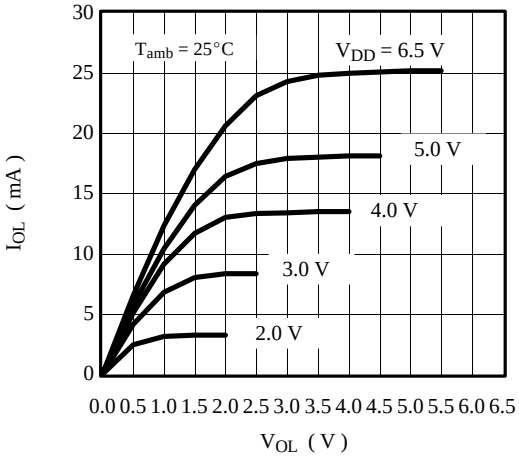

Figure 80. Output low current vs. output low voltage

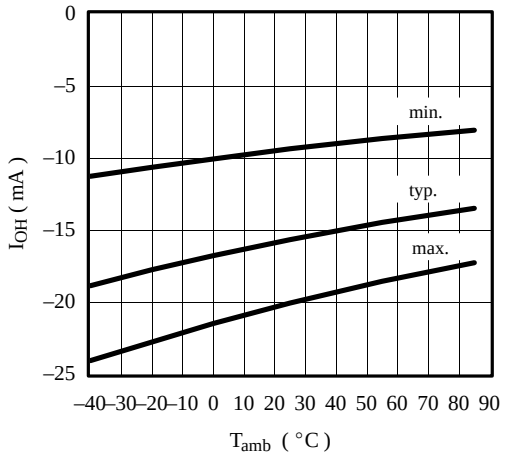

Figure 81. Output high current vs. T_{amb} = 25°C
V_{DD} = 6.5 V, V_{OH} = 0.8 × V_{DD}

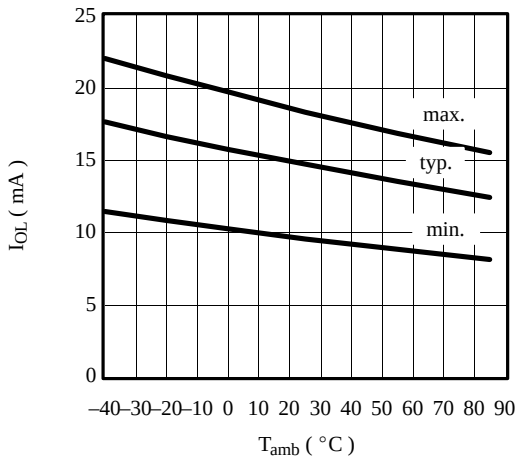

Figure 82. Output low current vs. T_{amb}
V_{DD} = 6.5 V, V_{OL} = 0.2 × V_{DD}

6 Package Information

Package SSO20
Dimensions in mm

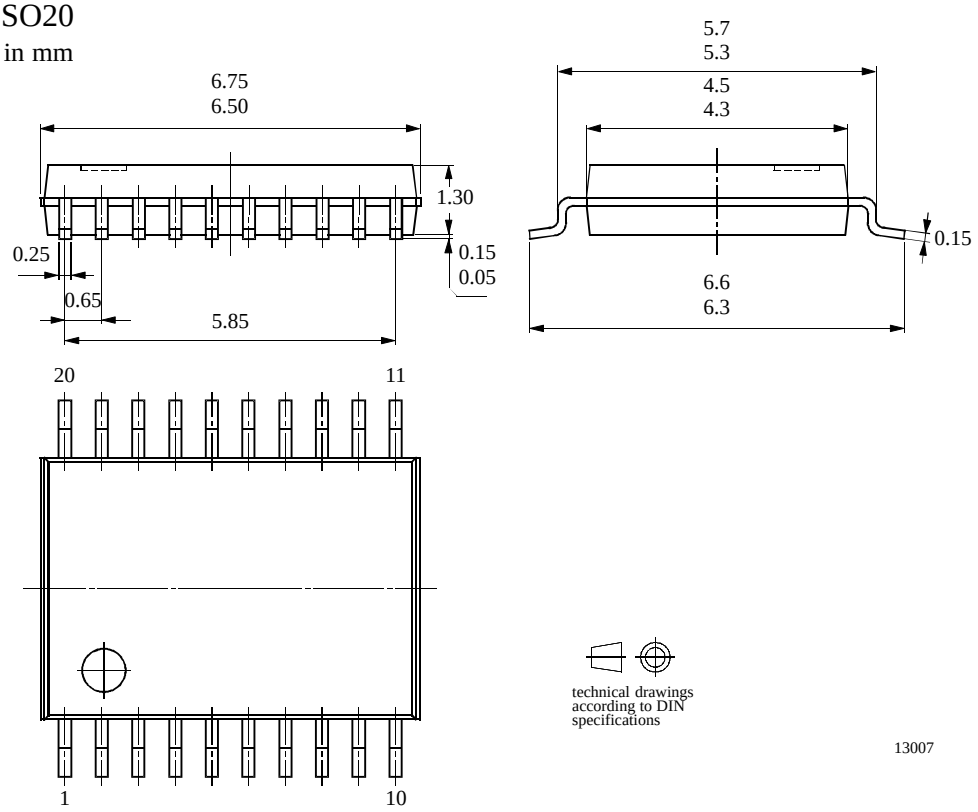

7 Ordering Information

Please select the option setting from the list below and insert ROM CRC.

Port 2

BP20 ❑ CMOS ❑ Switched pull-up
❑ Open drain [N] ❑ Switched pull-down
❑ Open drain [P] ❑ Static pull-up

BP21 ❑ CMOS ❑ Switched pull-up
❑ Open drain [N] ❑ Switched pull-down
❑ Open drain [P] ❑ Static pull-up
❑ Static pull-down

BP22 ❑ CMOS ❑ Switched pull-up
❑ Open drain [N] ❑ Switched pull-down
❑ Open drain [P] ❑ Static pull-up
❑ Static pull-down

BP23 ❑ CMOS ❑ Switched pull-up
❑ Open drain [N] ❑ Switched pull-down
❑ Open drain [P] ❑ Static pull-up
❑ Static pull-down

Port 4

BP40 ❑ CMOS ❑ Switched pull-up
❑ Open drain [N] ❑ Switched pull-down
❑ Open drain [P] ❑ Static pull-up
❑ Static pull-down

BP41 ❑ CMOS ❑ Switched pull-up
❑ Open drain [N] ❑ Switched pull-down
❑ Open drain [P] ❑ Static pull-up
❑ Static pull-down

BP42 ❑ CMOS ❑ Switched pull-up
❑ Open drain [N] ❑ Switched pull-down
❑ Open drain [P] ❑ Static pull-up
❑ Static pull-down

BP43 ❑ CMOS ❑ Switched pull-up
❑ Open drain [N] ❑ Switched pull-down
❑ Open drain [P] ❑ Static pull-up
❑ Static pull-down

Port52

BP50 ❑ CMOS ❑ Switched pull-up
❑ Open drain [N] ❑ Switched pull-down
❑ Open drain [P] ❑ Static pull-up
❑ Static pull-down

BP51 ❑ CMOS ❑ Switched pull-up
❑ Open drain [N] ❑ Switched pull-down
❑ Open drain [P] ❑ Static pull-up
❑ Static pull-down

BP52 ❑ CMOS ❑ Switched pull-up
❑ Open drain [N] ❑ Switched pull-down
❑ Open drain [P] ❑ Static pull-up
❑ Static pull-down

BP53 ❑ CMOS ❑ Switched pull-up
❑ Open drain [N] ❑ Switched pull-down
❑ Open drain [P] ❑ Static pull-up
❑ Static pull-down

Clock used

❑ External resistor
❑ External clock
❑ 32-kHz crystal
❑ 4-MHz crystal

ECM(External clock monitor)

❑ Enable
❑ Disable

Watchdog

❑ Softlock
❑ Hardlock

File:_____. HEX CRC: _____ HEX

Approval Date: ____–____–____ Signature: _____

Ozone Depleting Substances Policy Statement

It is the policy of **Atmel Germany GmbH** to

1. Meet all present and future national and international statutory requirements.

2. Regularly and continuously improve the performance of our products, processes, distribution and operating systems with respect to their impact on the health and safety of our employees and the public, as well as their impact on the environment.

It is particular concern to control or eliminate releases of those substances into the atmosphere which are known as ozone depleting substances (ODSs).

The Montreal Protocol (1987) and its London Amendments (1990) intend to severely restrict the use of ODSs and forbid their use within the next ten years. Various national and international initiatives are pressing for an earlier ban on these substances.

Atmel Germany GmbH has been able to use its policy of continuous improvements to eliminate the use of ODSs listed in the following documents.

1. Annex A, B and list of transitional substances of the Montreal Protocol and the London Amendments respectively

2. Class I and II ozone depleting substances in the Clean Air Act Amendments of 1990 by the Environmental Protection Agency (EPA) in the USA

3. Council Decision 88/540/EEC and 91/690/EEC Annex A, B and C (transitional substances) respectively.

Atmel Germany GmbH can certify that our semiconductors are not manufactured with ozone depleting substances and do not contain such substances.

We reserve the right to make changes to improve technical design and may do so without further notice.
Parameters can vary in different applications. All operating parameters must be validated for each customer application by the customer. Should the buyer use Atmel products for any unintended or unauthorized application, the buyer shall indemnify Atmel against all claims, costs, damages, and expenses, arising out of, directly or indirectly, any claim of personal damage, injury or death associated with such unintended or unauthorized use.

Data sheets can also be retrieved from the Internet: http://www.atmel–wm.com
1.

Atmel Germany GmbH, P.O.B. 3535, D-74025 Heilbronn, Germany
Telephone: 49 (0)7131 67 2594, Fax number: 49 (0)7131 67 2423