M29F800AT
M29F800AB

8 Mbit (1Mb x8 or 512Kb x16, Boot Block) Single Supply Flash Memory

PRELIMINARY DATA

- SINGLE 5V±10% SUPPLY VOLTAGE for PROGRAM, ERASE and READ OPERATIONS
- ACCESS TIME: 70ns
- PROGRAMMING TIME
  - 8µs per Byte/Word typical
- 19 MEMORY BLOCKS
  - 1 Boot Block (Top or Bottom Location)
  - 2 Parameter and 16 Main Blocks
- PROGRAM/ERASE CONTROLLER
  - Embedded Byte/Word Program algorithm
  - Embedded Multi-Block/Chip Erase algorithm
  - Status Register Polling and Toggle Bits
  - Ready/Busy Output Pin
- ERASE SUSPEND and RESUME MODES
  - Read and Program another Block during Erase Suspend
- TEMPORARY BLOCK UNPROTECTION MODE
- LOW POWER CONSUMPTION
  - Standby and Automatic Standby
- 100,000 PROGRAM/ERASE CYCLES per BLOCK
- 20 YEARS DATA RETENTION
  - Defectivity below 1 ppm/year
- ELECTRONIC SIGNATURE
  - Manufacturer Code: 0020h
  - M29F800AT Device Code: 00ECh
  - M29F800AB Device Code: 0058h

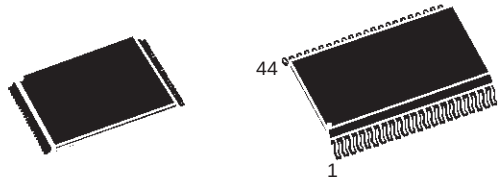

TSOP48 (N)
12 x 20mm

SO44 (M)

Figure 1. Logic Diagram

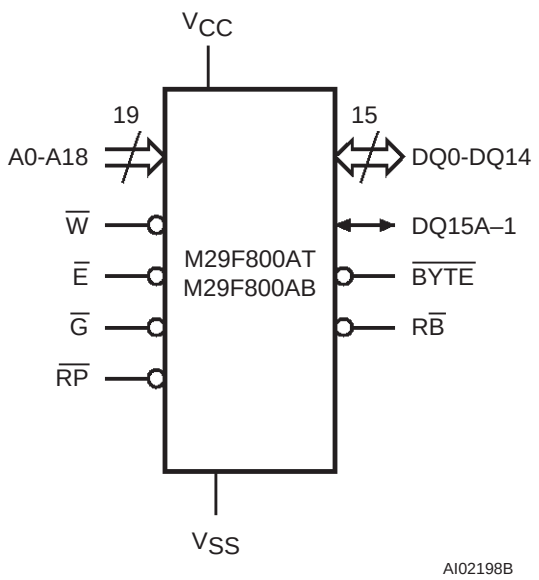

This is preliminary information on a new product now in development or undergoing evaluation. Details are subject to change without notice.

Figure 2A. TSOP Connections

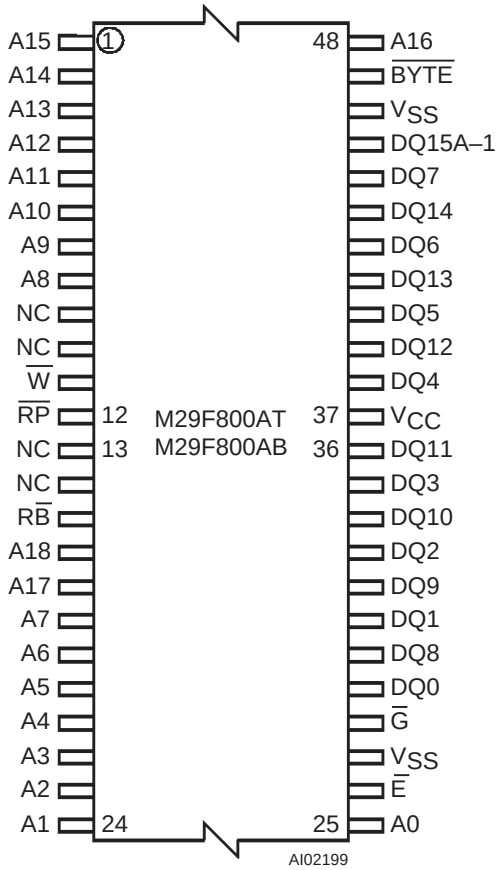

Figure 2B. SO Connections

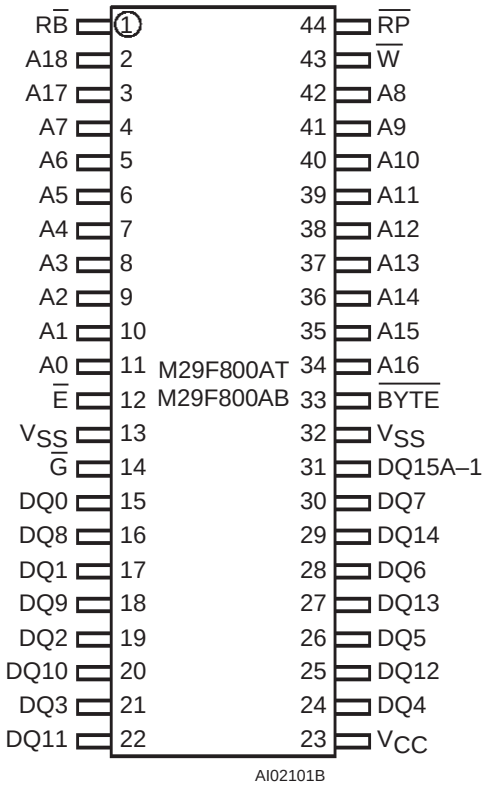

Table 1. Signal Names

A0-A18	Address Inputs
DQ0-DQ7	Data Inputs/Outputs
DQ8-DQ14	Data Inputs/Outputs
DQ15A–1	Data Input/Output or Address Input
$\overline{E}$	Chip Enable
$\overline{G}$	Output Enable
$\overline{W}$	Write Enable
$\overline{RP}$	Reset/Block Temporary Unprotect
$R\overline{B}$	Ready/Busy Output
$\overline{BYTE}$	Byte/Word Organization Select
V_{CC}	Supply Voltage
V_{SS}	Ground
NC	Not Connected Internally

SUMMARY DESCRIPTION

The M29F800A is an 8 Mbit (1Mb x8 or 512Kb x16) non-volatile memory that can be read, erased and reprogrammed. These operations can be performed using a single 5V supply. On power-up the memory defaults to its Read mode where it can be read in the same way as a ROM or EPROM.

The memory is divided into blocks that can be erased independently so it is possible to preserve valid data while old data is erased. Each block can be protected independently to prevent accidental Program or Erase commands from modifying the memory. Program and Erase commands are written to the Command Interface of the memory. An on-chip Program/Erase Controller simplifies the process of programming or erasing the memory by taking care of all of the special operations that are required to update the memory contents. The end of a program or erase operation can be detected and any error conditions identified. The command set required to control the memory is consistent with JEDEC standards.

Table 2. Absolute Maximum Ratings (1)

Symbol	Parameter	Value	Unit
T_A	Ambient Operating Temperature (Temperature Range Option 1)	0 to 70	°C
	Ambient Operating Temperature (Temperature Range Option 6)	–40 to 85	°C
	Ambient Operating Temperature (Temperature Range Option 3)	–40 to 125	°C
T_{BIAS}	Temperature Under Bias	–50 to 125	°C
T_{STG}	Storage Temperature	–65 to 150	°C
V_{IO} (2)	Input or Output Voltage	–0.6 to 6	V
V_{CC}	Supply Voltage	–0.6 to 6	V
V_{ID}	Identification Voltage	–0.6 to 13.5	V

Note: 1. Except for the rating "Operating Temperature Range", stresses above those listed in the Table "Absolute Maximum Ratings" may cause permanent damage to the device. These are stress ratings only and operation of the device at these or any other conditions above those indicated in the Operating sections of this specification is not implied. Exposure to Absolute Maximum Rating conditions for extended periods may affect device reliability. Refer also to the STMicroelectronics SURE Program and other relevant quality documents.
2. Minimum Voltage may undershoot to –2V during transition and for less than 20ns during transitions.

The blocks in the memory are asymmetrically arranged, see Tables 3A and 3B, Block Addresses. The first or last 64 Kbytes have been divided into four additional blocks. The 16 Kbyte Boot Block can be used for small initialization code to start the microprocessor, the two 8 Kbyte Parameter Blocks can be used for parameter storage and the remaining 32K is a small Main Block where the application may be stored.

Chip Enable, Output Enable and Write Enable signals control the bus operation of the memory. They allow simple connection to most microprocessors, often without additional logic.

The memory is offered in TSOP48 (12 x 20mm) and SO44 packages. Access times of 70ns and 90ns are available. The memory is supplied with all the bits erased (set to '1').

SIGNAL DESCRIPTIONS

See Figure 1, Logic Diagram, and Table 1, Signal Names, for a brief overview of the signals connected to this device.

Address Inputs (A0-A18). The Address Inputs select the cells in the memory array to access during Bus Read operations. During Bus Write operations they control the commands sent to the Command Interface of the internal state machine.

Data Inputs/Outputs (DQ0-DQ7). The Data Inputs/Outputs output the data stored at the selected address during a Bus Read operation. During Bus Write operations they represent the commands sent to the Command Interface of the internal state machine.

Data Inputs/Outputs (DQ8-DQ14). The Data Inputs/Outputs output the data stored at the selected address during a Bus Read operation when $\overline{BYTE}$ is High, V_{IH}. When $\overline{BYTE}$ is Low, V_{IL}, these pins are not used and are high impedance. During Bus Write operations the Command Register does not use these bits. When reading the Status Register these bits should be ignored.

Data Input/Output or Address Input (DQ15A-1). When $\overline{BYTE}$ is High, V_{IH}, this pin behaves as a Data Input/Output pin (as DQ8-DQ14). When $\overline{BYTE}$ is Low, V_{IL}, this pin behaves as an address pin; DQ15A–1 Low will select the LSB of the Word on the other addresses, DQ15A–1 High will select the MSB. Throughout the text consider references to the Data Input/Output to include this pin when $\overline{BYTE}$ is High and references to the Address Inputs to include this pin when $\overline{BYTE}$ is Low except when stated explicitly otherwise.

Table 3A. M29F800AT Block Addresses

Size (Kbytes)	Address Range (x8)	Address Range (x16)
16	FC000h-FFFFFh	7E000h-7FFFFh
8	FA000h-FBFFFh	7D000h-7DFFFh
8	F8000h-F9FFFh	7C000h-7CFFFh
32	F0000h-F7FFFh	78000h-7BFFFh
64	E0000h-EFFFFh	70000h-77FFFh
64	D0000h-DFFFFh	68000h-6FFFFh
64	C0000h-CFFFFh	60000h-67FFFh
64	B0000h-BFFFFh	58000h-5FFFFh
64	A0000h-AFFFFh	50000h-57FFFh
64	90000h-9FFFFh	48000h-4FFFFh
64	80000h-8FFFFh	40000h-47FFFh
64	70000h-7FFFFh	38000h-3FFFFh
64	60000h-6FFFFh	30000h-37FFFh
64	50000h-5FFFFh	28000h-2FFFFh
64	40000h-4FFFFh	20000h-27FFFh
64	30000h-3FFFFh	18000h-1FFFFh
64	20000h-2FFFFh	10000h-17FFFh
64	10000h-1FFFFh	08000h-0FFFFh
64	00000h-0FFFFh	00000h-07FFFh

Table 3B. M29F800AB Block Addresses

Size (Kbytes)	Address Range (x8)	Address Range (x16)
64	F0000h-FFFFFh	78000h-7FFFFh
64	E0000h-EFFFFh	70000h-77FFFh
64	D0000h-DFFFFh	68000h-6FFFFh
64	C0000h-CFFFFh	60000h-67FFFh
64	B0000h-BFFFFh	58000h-5FFFFh
64	A0000h-AFFFFh	50000h-57FFFh
64	90000h-9FFFFh	48000h-4FFFFh
64	80000h-8FFFFh	40000h-47FFFh
64	70000h-7FFFFh	38000h-3FFFFh
64	60000h-6FFFFh	30000h-37FFFh
64	50000h-5FFFFh	28000h-2FFFFh
64	40000h-4FFFFh	20000h-27FFFh
64	30000h-3FFFFh	18000h-1FFFFh
64	20000h-2FFFFh	10000h-17FFFh
64	10000h-1FFFFh	08000h-0FFFFh
32	08000h-0FFFFh	04000h-07FFFh
8	06000h-07FFFh	03000h-03FFFh
8	04000h-05FFFh	02000h-02FFFh
16	00000h-03FFFh	00000h-01FFFh

Chip Enable ($\overline{E}$). The Chip Enable, $\overline{E}$, activates the memory, allowing Bus Read and Bus Write operations to be performed. When Chip Enable is High, V_{IH}, all other pins are ignored.

Output Enable ($\overline{G}$). The Output Enable, $\overline{G}$, controls the Bus Read operation of the memory.

Write Enable ($\overline{W}$). The Write Enable, $\overline{W}$, controls the Bus Write operation of the memory's Command Interface.

Reset/Block Temporary Unprotect ($\overline{RP}$). The Reset/Block Temporary Unprotect pin can be used to apply a Hardware Reset to the memory or to temporarily unprotect all blocks that have been protected.

A Hardware Reset is achieved by holding Reset/Block Temporary Unprotect Low, V_{IL}, for at least t_{PLPX}. After Reset/Block Temporary Unprotect goes High, V_{IH}, the memory will be ready for Bus Read and Bus Write operations after t_{PHEL} or t_{RHEL}, whichever occurs last. See the Ready/Busy Output section, Table 14 and Figure 10, Reset/Temporary Unprotect AC Characteristics for more details.

Holding $\overline{RP}$ at V_{ID} will temporarily unprotect the protected blocks in the memory. Program and Erase operations on all blocks will be possible. The transition from V_{IH} to V_{ID} must be slower than t_{PHPHH}.

Ready/Busy Output ($\overline{RB}$). The Ready/Busy pin is an open-drain output that can be used to identify when the memory array can be read. Ready/Busy is high-impedance during Read mode, Auto Select mode and Erase Suspend mode.

After a Hardware Reset, Bus Read and Bus Write operations cannot begin until Ready/Busy becomes high-impedance. See Table 14 and Figure 10, Reset/Temporary Unprotect AC Characteristics.

During Program or Erase operations Ready/Busy is Low, V_{OL}. Ready/Busy will remain Low during Read/Reset commands or Hardware Resets until the memory is ready to enter Read mode.

The use of an open-drain output allows the Ready/Busy pins from several memories to be connected to a single pull-up resistor. A Low will then indicate that one, or more, of the memories is busy.

Byte/Word Organization Select ($\overline{BYTE}$). The Byte/Word Organization Select pin is used to switch between the 8-bit and 16-bit Bus modes of the memory. When Byte/Word Organization Select is Low, V_{IL}, the memory is in 8-bit mode, when it is High, V_{IH}, the memory is in 16-bit mode.

Table 4A. Bus Operations, $\overline{BYTE}$ = V_{IL}

Operation	$\overline{E}$	$\overline{G}$	$\overline{W}$	Address Inputs DQ15A–1, A0-A18	Data Inputs/Outputs	
					DQ14-DQ8	DQ7-DQ0
Bus Read	V_{IL}	V_{IL}	V_{IH}	Cell Address	Hi-Z	Data Output
Bus Write	V_{IL}	V_{IH}	V_{IL}	Command Address	Hi-Z	Data Input
Output Disable	X	V_{IH}	V_{IH}	X	Hi-Z	Hi-Z
Standby	V_{IH}	X	X	X	Hi-Z	Hi-Z
Read Manufacturer Code	V_{IL}	V_{IL}	V_{IH}	A0 = V_{IL}, A1 = V_{IL}, A9 = V_{ID}, Others V_{IL} or V_{IH}	Hi-Z	20h
Read Device Code	V_{IL}	V_{IL}	V_{IH}	A0 = V_{IH}, A1 = V_{IL}, A9 = V_{ID}, Others V_{IL} or V_{IH}	Hi-Z	ECh (M29F800AT) 58h (M29F800AB)

Note: X = V_{IL} or V_{IH}.

Table 4B. Bus Operations, $\overline{BYTE}$ = V_{IH}

Operation	$\overline{E}$	$\overline{G}$	$\overline{W}$	Address Inputs A0-A18	Data Inputs/Outputs DQ15A–1, DQ14-DQ0
Bus Read	V_{IL}	V_{IL}	V_{IH}	Cell Address	Data Output
Bus Write	V_{IL}	V_{IH}	V_{IL}	Command Address	Data Input
Output Disable	X	V_{IH}	V_{IH}	X	Hi-Z
Standby	V_{IH}	X	X	X	Hi-Z
Read Manufacturer Code	V_{IL}	V_{IL}	V_{IH}	A0 = V_{IL}, A1 = V_{IL}, A9 = V_{ID}, Others V_{IL} or V_{IH}	0020h
Read Device Code	V_{IL}	V_{IL}	V_{IH}	A0 = V_{IH}, A1 = V_{IL}, A9 = V_{ID}, Others V_{IL} or V_{IH}	00ECh (M29F800AT) 0058h (M29F800AB)

Note: X = V_{IL} or V_{IH}.

V_{CC} Supply Voltage. The V_{CC} Supply Voltage supplies the power for all operations (Read, Program, Erase etc.).

The Command Interface is disabled when the V_{CC} Supply Voltage is less than the Lockout Voltage, V_{LKO}. This prevents Bus Write operations from accidentally damaging the data during power up, power down and power surges. If the Program/Erase Controller is programming or erasing during this time then the operation aborts and the memory contents being altered will be invalid.

A 0.1µF capacitor should be connected between the V_{CC} Supply Voltage pin and the V_{SS} Ground pin to decouple the current surges from the power supply. The PCB track widths must be sufficient to carry the currents required during program and erase operations, I_{CC4}.

V_{SS} Ground. The V_{SS} Ground is the reference for all voltage measurements.

BUS OPERATIONS

There are five standard bus operations that control the device. These are Bus Read, Bus Write, Output Disable, Standby and Automatic Standby. See Tables 4A and 4B, Bus Operations, for a summary. Typically glitches of less than 5ns on Chip Enable or Write Enable are ignored by the memory and do not affect bus operations.

Bus Read. Bus Read operations read from the memory cells, or specific registers in the Command Interface. A valid Bus Read operation involves setting the desired address on the Address Inputs, applying a Low signal, V_{IL}, to Chip Enable and Output Enable and keeping Write Enable High, V_{IH}. The Data Inputs/Outputs will output the value, see Figure 7, Read Mode AC Waveforms, and Table 11, Read AC Characteristics, for details of when the output becomes valid.

Bus Write. Bus Write operations write to the Command Interface. A valid Bus Write operation begins by setting the desired address on the Ad-

dress Inputs. The Address Inputs are latched by the Command Interface on the falling edge of Chip Enable or Write Enable, whichever occurs last. The Data Inputs/Outputs are latched by the Command Interface on the rising edge of Chip Enable or Write Enable, whichever occurs first. Output Enable must remain High, V_{IH}, during the whole Bus Write operation. See Figures 8 and 9, Write AC Waveforms, and Tables 12 and 13, Write AC Characteristics, for details of the timing requirements.

Output Disable. The Data Inputs/Outputs are in the high impedance state when Output Enable is High, V_{IH}.

Standby. When Chip Enable is High, V_{IH}, the Data Inputs/Outputs pins are placed in the high-impedance state and the Supply Current is reduced to the Standby level.

When Chip Enable is at V_{IH} the Supply Current is reduced to the TTL Standby Supply Current, I_{CC2}. To further reduce the Supply Current to the CMOS Standby Supply Current, I_{CC3}, Chip Enable should be held within $V_{CC} \pm 0.2V$. For Standby current levels see Table 10, DC Characteristics.

During program or erase operations the memory will continue to use the Program/Erase Supply Current, I_{CC4}, for Program or Erase operations until the operation completes.

Automatic Standby. If CMOS levels ($V_{CC} \pm 0.2V$) are used to drive the bus and the bus is inactive for 150ns or more the memory enters Automatic Standby where the internal Supply Current is reduced to the CMOS Standby Supply Current, I_{CC3}. The Data Inputs/Outputs will still output data if a Bus Read operation is in progress.

Special Bus Operations

Additional bus operations can be performed to read the Electronic Signature and also to apply and remove Block Protection. These bus operations are intended for use by programming equipment and are not usually used in applications. They require V_{ID} to be applied to some pins.

Electronic Signature. The memory has two codes, the manufacturer code and the device code, that can be read to identify the memory. These codes can be read by applying the signals listed in Tables 4A and 4B, Bus Operations.

Block Protection and **Blocks Unprotection.** Each block can be separately protected against accidental Program or Erase. Protected blocks can be unprotected to allow data to be changed. Block Protection and Block Unprotection operations must only be performed on programming equipment.

For further information refer to Application Note AN1122, Applying Protection and Unprotection to M29 Series Flash.

COMMAND INTERFACE

All Bus Write operations to the memory are interpreted by the Command Interface. Commands consist of one or more sequential Bus Write operations. Failure to observe a valid sequence of Bus Write operations will result in the memory returning to Read mode. In this case, after at least 50ns, an address transition or Chip Enable going Low is required before reading correct data. The long command sequences are imposed to maximize data security.

The address used for the commands changes depending on whether the memory is in 16-bit or 8-bit mode. See either Table 5A, or 5B, depending on the configuration that is being used, for a summary of the commands.

Read/Reset Command. The Read/Reset command returns the memory to its Read mode where it behaves like a ROM or EPROM. It also resets the errors in the Status Register. Either one or three Bus Write operations can be used to issue the Read/Reset command.

If the Read/Reset command is issued during a Block Erase operation or following a Programming or Erase error then the memory will take up to 10µs to abort. During the abort period no valid data can be read from the memory. Issuing a Read/Reset command during a Block Erase operation will leave invalid data in the memory.

Auto Select Command. The Auto Select command is used to read the Manufacturer Code, the Device Code and the Block Protection Status. Three consecutive Bus Write operations are required to issue the Auto Select command. Once the Auto Select command is issued the memory remains in Auto Select mode until another command is issued.

From the Auto Select mode the Manufacturer Code can be read using a Bus Read operation with $A0 = V_{IL}$ and $A1 = V_{IL}$. The other address bits may be set to either V_{IL} or V_{IH}. The Manufacturer Code for STMicroelectronics is 0020h.

The Device Code can be read using a Bus Read operation with $A0 = V_{IH}$ and $A1 = V_{IL}$. The other address bits may be set to either V_{IL} or V_{IH}. The Device Code for the M29F800AT is 00ECh and for the M29F800AB is 0058h.

The Block Protection Status of each block can be read using a Bus Read operation with $A0 = V_{IL}$, $A1 = V_{IH}$, and A12-A18 specifying the address of the block. The other address bits may be set to either V_{IL} or V_{IH}. If the addressed block is protected then 01h is output on Data Inputs/Outputs DQ0-DQ7, otherwise 00h is output.

Program Command. The Program command can be used to program a value to one address in the memory array at a time. The command re-

Table 5A. Commands, 16-bit mode, $\overline{BYTE}$ = V_{IH}

Command	Length	Bus Write Operations											
		1st		2nd		3rd		4th		5th		6th	
		Addr	Data	Addr	Data	Addr	Data	Addr	Data	Addr	Data	Addr	Data
Read/Reset	1	X	F0										
	3	555	AA	2AA	55	X	F0						
Auto Select	3	555	AA	2AA	55	555	90						
Program	4	555	AA	2AA	55	555	A0	PA	PD				
Chip Erase	6	555	AA	2AA	55	555	80	555	AA	2AA	55	555	10
Block Erase	6+	555	AA	2AA	55	555	80	555	AA	2AA	55	BA	30
Erase Suspend	1	X	B0										
Erase Resume	1	X	30										

Table 5B. Commands, 8-bit mode, $\overline{BYTE}$ = V_{IL}

Command	Length	Bus Write Operations											
		1st		2nd		3rd		4th		5th		6th	
		Addr	Data	Addr	Data	Addr	Data	Addr	Data	Addr	Data	Addr	Data
Read/Reset	1	X	F0										
	3	AAA	AA	555	55	X	F0						
Auto Select	3	AAA	AA	555	55	AAA	90						
Program	4	AAA	AA	555	55	AAA	A0	PA	PD				
Chip Erase	6	AAA	AA	555	55	AAA	80	AAA	AA	555	55	AAA	10
Block Erase	6+	AAA	AA	555	55	AAA	80	AAA	AA	555	55	BA	30
Erase Suspend	1	X	B0										
Erase Resume	1	X	30										

Note: X Don't Care, PA Program Address, PD Program Data, BA Any address in the Block.

All values in the table are in hexadecimal.

The Command Interface only uses A–1, A0-A10 and DQ0-DQ7 to verify the commands; A11-A18, DQ8-DQ14 and DQ15 are Don't Care. DQ15A–1 is A–1 when $\overline{BYTE}$ is V_{IL} or DQ15 when $\overline{BYTE}$ is V_{IH}.

Read/Reset. After a Read/Reset command, read the memory as normal until another command is issued.

Auto Select. After an Auto Select command, read Manufacturer ID, Device ID or Block Protection Status.

Program, Chip Erase, Block Erase. After these commands read the Status Register until the Program/Erase Controller completes and the memory returns to Read Mode. Add additional Blocks during Block Erase Command with additional Bus Write Operations until the Timeout Bit is set.

Erase Suspend. After the Erase Suspend command read non-erasing memory blocks as normal, issue Auto Select and Program commands on non-erasing blocks as normal.

Erase Resume. After the Erase Resume command the suspended Erase operation resumes, read the Status Register until the Program/Erase Controller completes and the memory returns to Read Mode.

quires four Bus Write operations, the final write operation latches the address and data in the internal state machine and starts the Program/Erase Controller.

If the address falls in a protected block then the Program command is ignored, the data remains unchanged. The Status Register is never read and no error condition is given.

During the program operation the memory will ignore all commands. It is not possible to issue any command to abort or pause the operation. Typical program times are given in Table 6. Bus Read operations during the program operation will output the Status Register on the Data Inputs/Outputs. See the section on the Status Register for more details.

After the program operation has completed the memory will return to the Read mode, unless an error has occurred. When an error occurs the memory will continue to output the Status Register. A Read/Reset command must be issued to reset the error condition and return to Read mode.

Note that the Program command cannot change a bit set at '0' back to '1' and attempting to do so will cause an error. One of the Erase Commands must be used to set all the bits in a block or in the whole memory from '0' to '1'.

Table 6. Program, Erase Times and Program, Erase Endurance Cycles
(T_A = 0 to 70°C, –40 to 85°C or –40 to 125°C)

Parameter	Min	Typ (1)	Typical after 100k W/E Cycles (1)	Max	Unit
Chip Erase (All bits in the memory set to '0')		3	3		sec
Chip Erase		8	8	30	sec
Block Erase (64 Kbytes)		0.6	0.6	4	sec
Program (Byte or Word)		8	8	150	µs
Chip Program (Byte by Byte)		9	9	35	sec
Chip Program (Word by Word)		4.5	4.5	18	sec
Program/Erase Cycles (per Block)	100,000				cycles

Note: 1. T_A = 25°C, V_{CC} = 5V.

Chip Erase Command. The Chip Erase command can be used to erase the entire chip. Six Bus Write operations are required to issue the Chip Erase Command and start the Program/Erase Controller.

If any blocks are protected then these are ignored and all the other blocks are erased. If all of the blocks are protected the Chip Erase operation appears to start but will terminate within about 100µs, leaving the data unchanged. No error condition is given when protected blocks are ignored.

During the erase operation the memory will ignore all commands. It is not possible to issue any command to abort the operation. Typical chip erase times are given in Table 6. All Bus Read operations during the Chip Erase operation will output the Status Register on the Data Inputs/Outputs. See the section on the Status Register for more details.

After the Chip Erase operation has completed the memory will return to the Read Mode, unless an error has occurred. When an error occurs the memory will continue to output the Status Register. A Read/Reset command must be issued to reset the error condition and return to Read Mode.

The Chip Erase Command sets all of the bits in unprotected blocks of the memory to '1'. All previous data is lost.

Block Erase Command. The Block Erase command can be used to erase a list of one or more blocks. Six Bus Write operations are required to select the first block in the list. Each additional block in the list can be selected by repeating the sixth Bus Write operation using the address of the additional block. The Block Erase operation starts the Program/Erase Controller about 50µs after the last Bus Write operation. Once the Program/Erase Controller starts it is not possible to select any more blocks. Each additional block must therefore be selected within 50µs of the last block. The 50µs timer restarts when an additional block is selected. The Status Register can be read after the sixth Bus Write operation. See the Status Register for details on how to identify if the Program/Erase Controller has started the Block Erase operation.

If any selected blocks are protected then these are ignored and all the other selected blocks are erased. If all of the selected blocks are protected the Block Erase operation appears to start but will terminate within about 100µs, leaving the data unchanged. No error condition is given when protected blocks are ignored.

During the Block Erase operation the memory will ignore all commands except the Erase Suspend and Read/Reset commands. Typical block erase times are given in Table 6. All Bus Read operations during the Block Erase operation will output the Status Register on the Data Inputs/Outputs. See the section on the Status Register for more details.

After the Block Erase operation has completed the memory will return to the Read Mode, unless an error has occurred. When an error occurs the memory will continue to output the Status Register. A Read/Reset command must be issued to reset the error condition and return to Read mode.

The Block Erase Command sets all of the bits in the unprotected selected blocks to '1'. All previous data in the selected blocks is lost.

Erase Suspend Command. The Erase Suspend Command may be used to temporarily suspend a Block Erase operation and return the memory to Read mode. The command requires one Bus Write operation.

Table 7. Status Register Bits

Operation	Address	DQ7	DQ6	DQ5	DQ3	DQ2	$R\overline{B}$
Program	Any Address	$\overline{DQ7}$	Toggle	0	–	–	0
Program During Erase Suspend	Any Address	$\overline{DQ7}$	Toggle	0	–	–	0
Program Error	Any Address	$\overline{DQ7}$	Toggle	1	–	–	0
Chip Erase	Any Address	0	Toggle	0	1	Toggle	0
Block Erase before timeout	Erasing Block	0	Toggle	0	0	Toggle	0
	Non-Erasing Block	0	Toggle	0	0	No Toggle	0
Block Erase	Erasing Block	0	Toggle	0	1	Toggle	0
	Non-Erasing Block	0	Toggle	0	1	No Toggle	0
Erase Suspend	Erasing Block	1	No Toggle	0	1	Toggle	1
	Non-Erasing Block	Data read as normal					1
Erase Error	Good Block Address	0	Toggle	1	1	No Toggle	0
	Faulty Block Address	0	Toggle	1	1	Toggle	0

Note: Unspecified data bits should be ignored.

The Program/Erase Controller will suspend within 15µs of the Erase Suspend Command being issued. Once the Program/Erase Controller has stopped the memory will be set to Read mode and the Erase will be suspended. If the Erase Suspend command is issued during the period when the memory is waiting for an additional block (before the Program/Erase Controller starts) then the Erase is suspended immediately and will start immediately when the Erase Resume Command is issued. It will not be possible to select any further blocks for erasure after the Erase Resume.

During Erase Suspend it is possible to Read and Program cells in blocks that are not being erased; both Read and Program operations behave as normal on these blocks. Reading from blocks that are being erased will output the Status Register. It is also possible to enter the Auto Select mode: the memory will behave as in the Auto Select mode on all blocks until a Read/Reset command returns the memory to Erase Suspend mode.

Erase Resume Command. The Erase Resume command must be used to restart the Program/Erase Controller from Erase Suspend. An erase can be suspended and resumed more than once.

STATUS REGISTER

Bus Read operations from any address always read the Status Register during Program and Erase operations. It is also read during Erase Suspend when an address within a block being erased is accessed.

The bits in the Status Register are summarized in Table 7, Status Register Bits.

Data Polling Bit (DQ7). The Data Polling Bit can be used to identify whether the Program/Erase Controller has successfully completed its operation or if it has responded to an Erase Suspend. The Data Polling Bit is output on DQ7 when the Status Register is read.

During Program operations the Data Polling Bit outputs the complement of the bit being programmed to DQ7. After successful completion of the Program operation the memory returns to Read mode and Bus Read operations from the address just programmed output DQ7, not its complement.

During Erase operations the Data Polling Bit outputs ’0’, the complement of the erased state of DQ7. After successful completion of the Erase operation the memory returns to Read Mode.

In Erase Suspend mode the Data Polling Bit will output a ’1’ during a Bus Read operation within a block being erased. The Data Polling Bit will change from a ’0’ to a ’1’ when the Program/Erase Controller has suspended the Erase operation.

Figure 3, Data Polling Flowchart, gives an example of how to use the Data Polling Bit. A Valid Address is the address being programmed or an address within the block being erased.

Figure 3. Data Polling Flowchart

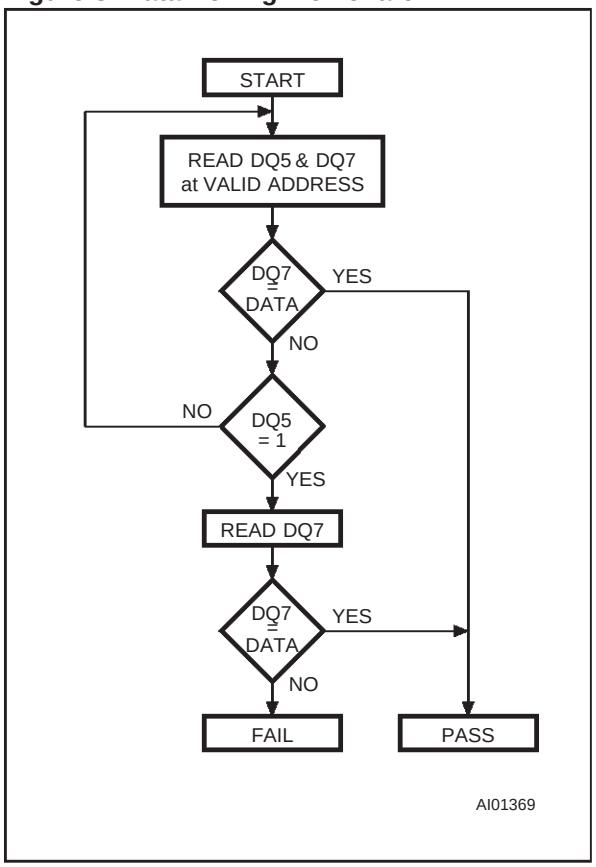

Figure 4. Data Toggle Flowchart

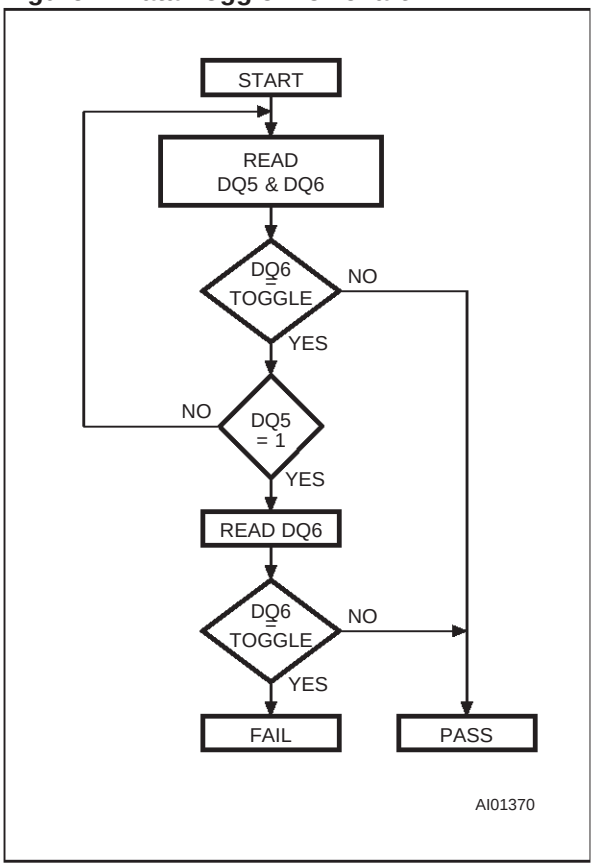

Toggle Bit (DQ6). The Toggle Bit can be used to identify whether the Program/Erase Controller has successfully completed its operation or if it has responded to an Erase Suspend. The Toggle Bit is output on DQ6 when the Status Register is read.

During Program and Erase operations the Toggle Bit changes from '0' to '1' to '0', etc., with successive Bus Read operations at any address. After successful completion of the operation the memory returns to Read mode.

During Erase Suspend mode the Toggle Bit will output when addressing a cell within a block being erased. The Toggle Bit will stop toggling when the Program/Erase Controller has suspended the Erase operation.

Figure 4, Data Toggle Flowchart, gives an example of how to use the Data Toggle Bit.

Error Bit (DQ5). The Error Bit can be used to identify errors detected by the Program/Erase Controller. The Error Bit is set to '1' when a Program, Block Erase or Chip Erase operation fails to write the correct data to the memory. If the Error Bit is set a Read/Reset command must be issued before other commands are issued. The Error bit is output on DQ5 when the Status Register is read.

Note that the Program command cannot change a bit set at '0' back to '1' and attempting to do so will cause an error. One of the Erase Commands must be used to set all the bits in a block or in the whole memory from '0' to '1'.

Erase Timer Bit (DQ3). The Erase Timer Bit can be used to identify the start of Program/Erase Controller operation during a Block Erase command. Once the Program/Erase Controller starts erasing the Erase Timer Bit is set to '1'. Before the Program/Erase Controller starts the Erase Timer Bit is set to '0' and additional blocks to be erased may be written to the Command Interface. The Erase Timer Bit is output on DQ3 when the Status Register is read.

Table 8. AC Measurement Conditions

Parameter	M29F800A	
	70	90
AC Test Conditions	High Speed	Standard
Load Capacitance (C_L)	30pF	100pF
Input Rise and Fall Times	≤ 10ns	≤ 10ns
Input Pulse Voltages	0 to 3V	0.45 to 2.4V
Input and Output Timing Ref. Voltages	1.5V	0.8V and 2.0V

Figure 5. AC Testing Input Output Waveform

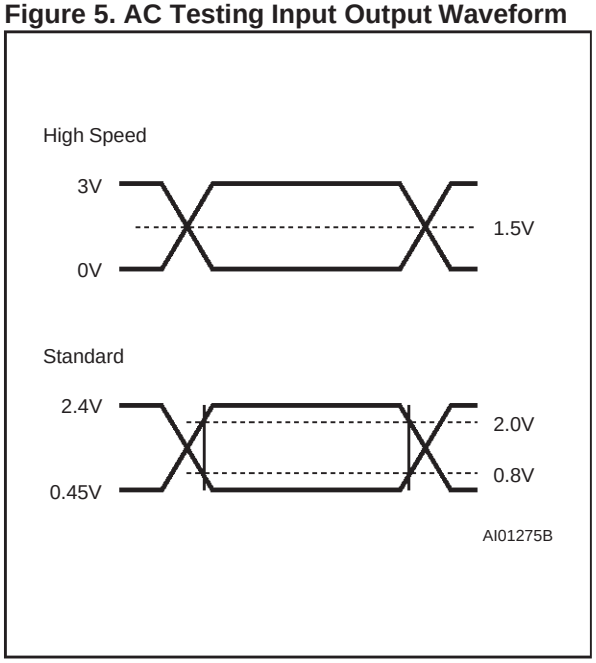

Figure 6. AC Testing Load Circuit

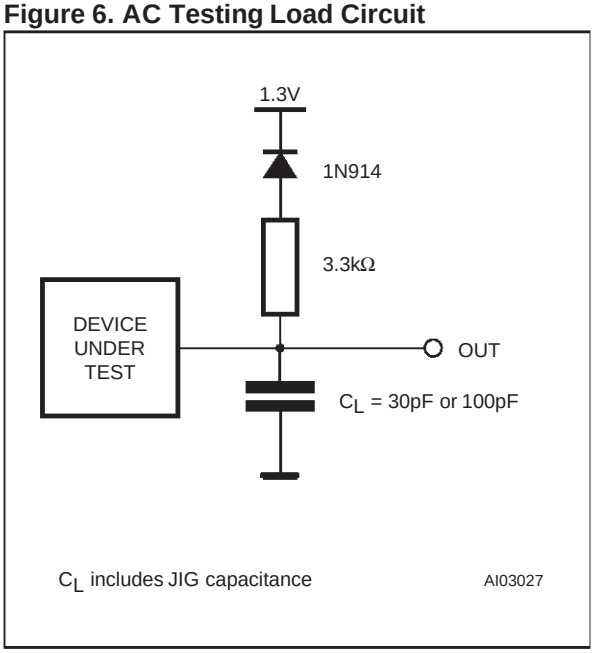

Table 9. Capacitance
(T_A = 25 °C, f = 1 MHz)

Symbol	Parameter	Test Condition	Min	Max	Unit
C_{IN}	Input Capacitance	V_{IN} = 0V		6	pF
C_{OUT}	Output Capacitance	V_{OUT} = 0V		12	pF

Note: Sampled only, not 100% tested.

Table 10. DC Characteristics
(T_A = 0 to 70°C, –40 to 85°C or –40 to 125°C)

Symbol	Parameter	Test Condition	Min	Typ. (2)	Max	Unit
I_{LI}	Input Leakage Current	$0V \le V_{IN} \le V_{CC}$			±1	µA
I_{LO}	Output Leakage Current	$0V \le V_{OUT} \le V_{CC}$			±1	µA
I_{CC1}	Supply Current (Read)	$\overline{E} = V_{IL}$, $\overline{G} = V_{IH}$, f = 6MHz		10	20	mA
I_{CC2}	Supply Current (Standby) TTL	$\overline{E} = V_{IH}$			1	mA
I_{CC3}	Supply Current (Standby) CMOS	$\overline{E} = V_{CC} \pm 0.2V$, $\overline{RP} = V_{CC} \pm 0.2V$		35	150	µA
I_{CC4} (1)	Supply Current (Program/Erase)	Program/Erase Controller active			20	mA
V_{IL}	Input Low Voltage		–0.5		0.8	V
V_{IH}	Input High Voltage		2		V_{CC} + 0.5	V
V_{OL}	Output Low Voltage	I_{OL} = 5.8mA			0.45	V
V_{OH}	Output High Voltage TTL	I_{OH} = –2.5mA	2.4			V
	Output High Voltage CMOS	I_{OH} = –100µA	V_{CC} – 0.4			V
V_{ID}	Identification Voltage		11.5		12.5	V
I_{ID}	Identification Current	$A9 = V_{ID}$			100	µA
V_{LKO} (1)	Program/Erase Lockout Supply Voltage		3.2		4.2	V

Note: 1. Sampled only, not 100% tested.
2. T_A = 25 °C, V_{CC} = 5V.

Alternative Toggle Bit (DQ2). The Alternative Toggle Bit can be used to monitor the Program/Erase controller during Erase operations. The Alternative Toggle Bit is output on DQ2 when the Status Register is read.

During Chip Erase and Block Erase operations the Toggle Bit changes from ’0’ to ’1’ to ’0’, etc., with successive Bus Read operations from addresses within the blocks being erased. Once the operation completes the memory returns to Read mode.

During Erase Suspend the Alternative Toggle Bit changes from ’0’ to ’1’ to ’0’, etc. with successive Bus Read operations from addresses within the blocks being erased. Bus Read operations to addresses within blocks not being erased will output the memory cell data as if in Read mode.

After an Erase operation that causes the Error Bit to be set the Alternative Toggle Bit can be used to identify which block or blocks have caused the error. The Alternative Toggle Bit changes from ’0’ to ’1’ to ’0’, etc. with successive Bus Read Operations from addresses within blocks that have not erased correctly. The Alternative Toggle Bit does not change if the addressed block has erased correctly.

Table 11. Read AC Characteristics
(TA = 0 to 70°C, –40 to 85°C or –40 to 125°C)

Symbol	Alt	Parameter	Test Condition		M29F800A		Unit
					70	90	
t_{AVAV}	t_{RC}	Address Valid to Next Address Valid	$\overline{E} = V_{IL}$, $\overline{G} = V_{IL}$	Min	70	90	ns
t_{AVQV}	t_{ACC}	Address Valid to Output Valid	$\overline{E} = V_{IL}$, $\overline{G} = V_{IL}$	Max	70	90	ns
t_{ELQX} (1)	t_{LZ}	Chip Enable Low to Output Transition	$\overline{G} = V_{IL}$	Min	0	0	ns
t_{ELQV}	t_{CE}	Chip Enable Low to Output Valid	$\overline{G} = V_{IL}$	Max	70	90	ns
t_{GLQX} (1)	t_{OLZ}	Output Enable Low to Output Transition	$\overline{E} = V_{IL}$	Min	0	0	ns
t_{GLQV}	t_{OE}	Output Enable Low to Output Valid	$\overline{E} = V_{IL}$	Max	30	35	ns
t_{EHQZ} (1)	t_{HZ}	Chip Enable High to Output Hi-Z	$\overline{G} = V_{IL}$	Max	20	20	ns
t_{GHQZ} (1)	t_{DF}	Output Enable High to Output Hi-Z	$\overline{E} = V_{IL}$	Max	20	20	ns
t_{EHQX} t_{GHQX} t_{AXQX}	t_{OH}	Chip Enable, Output Enable or Address Transition to Output Transition		Min	0	0	ns
t_{ELBL} t_{ELBH}	t_{ELFL} t_{ELFH}	Chip Enable to $\overline{BYTE}$ Low or High		Max	5	5	ns
t_{BLQZ}	t_{FLQZ}	$\overline{BYTE}$ Low to Output Hi-Z		Max	20	20	ns
t_{BHQV}	t_{FHQV}	$\overline{BYTE}$ High to Output Valid		Max	30	40	ns

Note: 1. Sampled only, not 100% tested.

Figure 7. Read Mode AC Waveforms

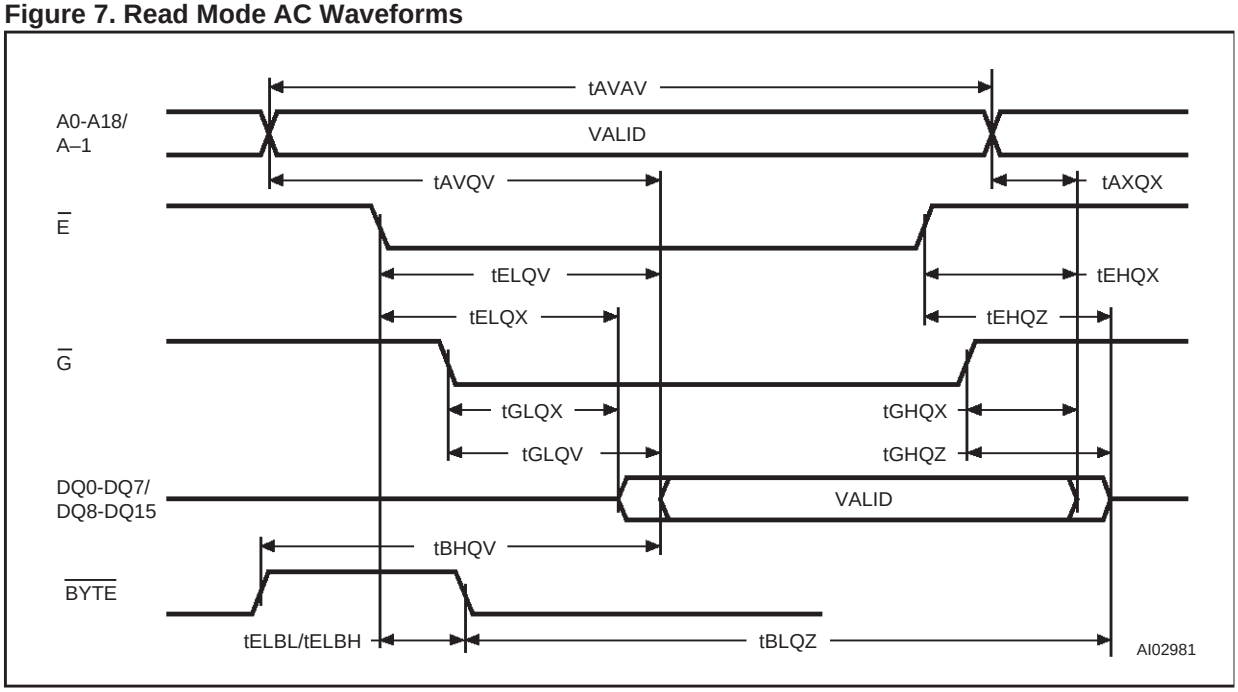

Table 12. Write AC Characteristics, Write Enable Controlled
(T_A = 0 to 70 °C, –40 to 85 °C or –40 to 125 °C)

Symbol	Alt	Parameter		M29F800A		Unit
				70	90	
t_{AVAV}	t_{WC}	Address Valid to Next Address Valid	Min	70	90	ns
t_{ELWL}	t_{CS}	Chip Enable Low to Write Enable Low	Min	0	0	ns
t_{WLWH}	t_{WP}	Write Enable Low to Write Enable High	Min	45	45	ns
t_{DVWH}	t_{DS}	Input Valid to Write Enable High	Min	30	45	ns
t_{WHDX}	t_{DH}	Write Enable High to Input Transition	Min	0	0	ns
t_{WHEH}	t_{CH}	Write Enable High to Chip Enable High	Min	0	0	ns
t_{WHWL}	t_{WPH}	Write Enable High to Write Enable Low	Min	20	20	ns
t_{AVWL}	t_{AS}	Address Valid to Write Enable Low	Min	0	0	ns
t_{WLAX}	t_{AH}	Write Enable Low to Address Transition	Min	45	45	ns
t_{GHWL}		Output Enable High to Write Enable Low	Min	0	0	ns
t_{WHGL}	t_{OEH}	Write Enable High to Output Enable Low	Min	0	0	ns
t_{WHRL} (1)	t_{BUSY}	Program/Erase Valid to $R\overline{B}$ Low	Max	30	35	ns
t_{VCHEL}	t_{VCS}	V_{CC} High to Chip Enable Low	Min	50	50	µs

Note: 1. Sampled only, not 100% tested.

Figure 8. Write AC Waveforms, Write Enable Controlled

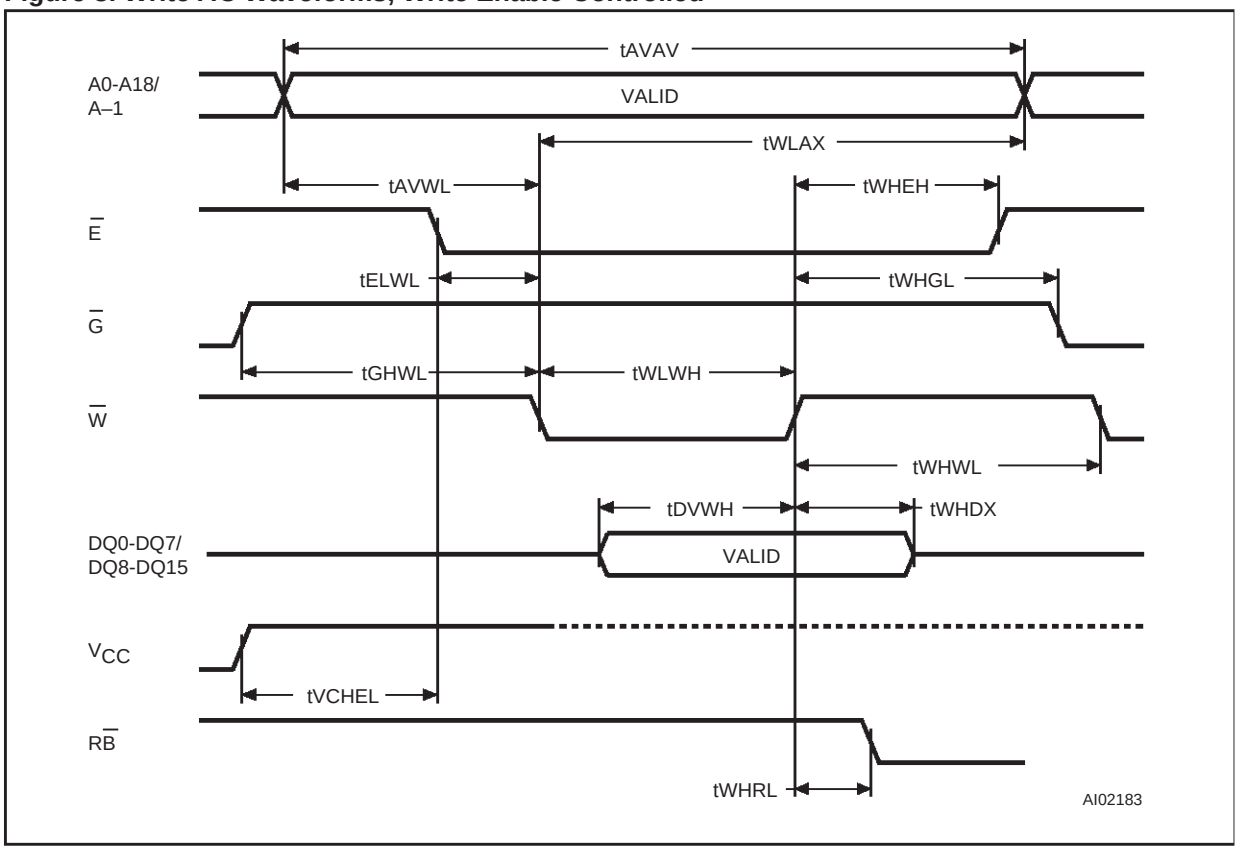

Table 13. Write AC Characteristics, Chip Enable Controlled
(T_A = 0 to 70 °C, –40 to 85 °C or –40 to 125 °C)

Symbol	Alt	Parameter		M29F800A		Unit
				70	90	
t_{AVAV}	t_{WC}	Address Valid to Next Address Valid	Min	70	90	ns
t_{WLEL}	t_{WS}	Write Enable Low to Chip Enable Low	Min	0	0	ns
t_{ELEH}	t_{CP}	Chip Enable Low to Chip Enable High	Min	45	45	ns
t_{DVEH}	t_{DS}	Input Valid to Chip Enable High	Min	30	45	ns
t_{EHDX}	t_{DH}	Chip Enable High to Input Transition	Min	0	0	ns
t_{EHWH}	t_{WH}	Chip Enable High to Write Enable High	Min	0	0	ns
t_{EHEL}	t_{CPH}	Chip Enable High to Chip Enable Low	Min	20	20	ns
t_{AVEL}	t_{AS}	Address Valid to Chip Enable Low	Min	0	0	ns
t_{ELAX}	t_{AH}	Chip Enable Low to Address Transition	Min	45	45	ns
t_{GHEL}		Output Enable High Chip Enable Low	Min	0	0	ns
t_{EHGL}	t_{OEH}	Chip Enable High to Output Enable Low	Min	0	0	ns
t_{EHRL} (1)	t_{BUSY}	Program/Erase Valid to $R\overline{B}$ Low	Max	30	35	ns
t_{VCHWL}	t_{VCS}	V_{CC} High to Write Enable Low	Min	50	50	µs

Note: 1. Sampled only, not 100% tested.

Figure 9. Write AC Waveforms, Chip Enable Controlled

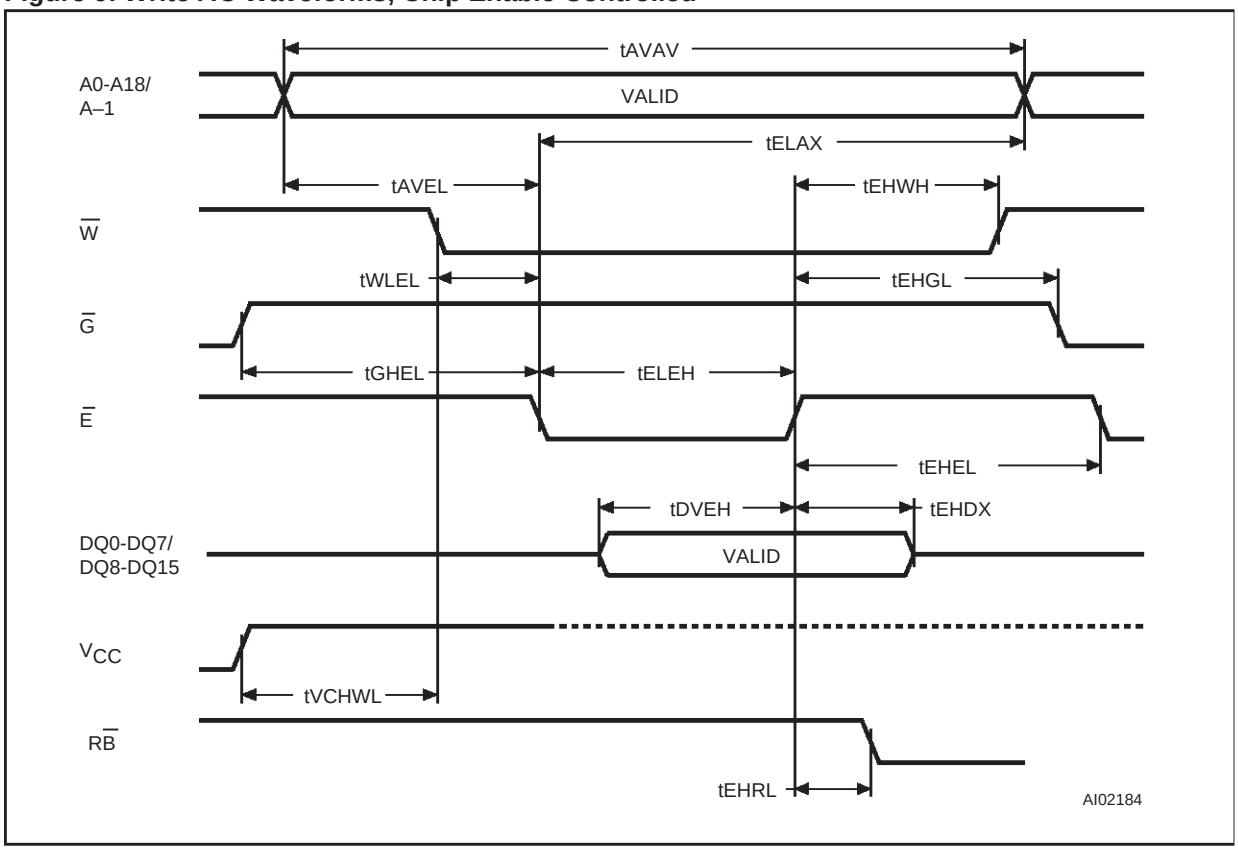

Table 14. Reset/Block Temporary Unprotect AC Characteristics
(T_A = 0 to 70 °C, –40 to 85 °C or –40 to 125 °C)

Symbol	Alt	Parameter		M29F800A		Unit
				70	90	
t_{PHWL} (1) t_{PHEL} t_{PHGL} (1)	t_{RH}	$\overline{RP}$ High to Write Enable Low, Chip Enable Low, Output Enable Low	Min	50	50	ns
t_{RHWL} (1) t_{RHEL} (1) t_{RHGL} (1)	t_{RB}	$R\overline{B}$ High to Write Enable Low, Chip Enable Low, Output Enable Low	Min	0	0	ns
t_{PLPX}	t_{RP}	$\overline{RP}$ Pulse Width	Min	500	500	ns
t_{PLYH} (1)	t_{READY}	$\overline{RP}$ Low to Read Mode	Max	10	10	µs
t_{PHPHH} (1)	t_{VIDR}	$\overline{RP}$ Rise Time to V_{ID}	Min	500	500	ns

Note: 1. Sampled only, not 100% tested.

Figure 10. Reset/Block Temporary Unprotect AC Waveforms

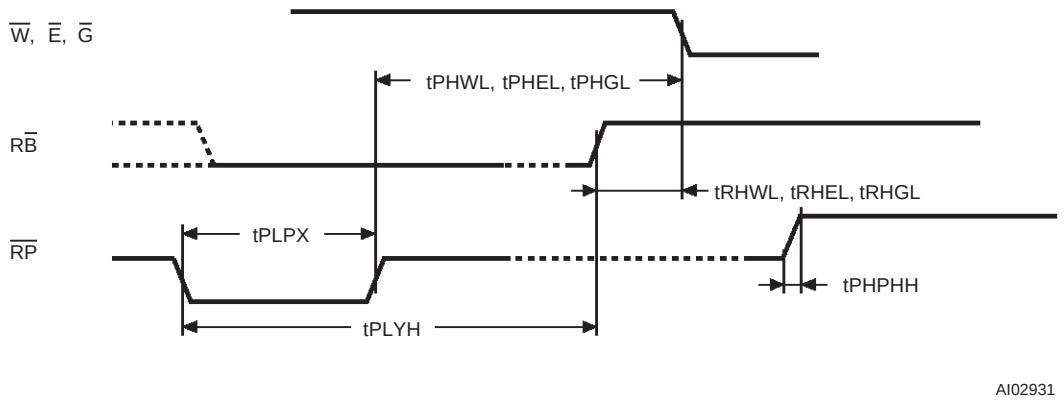

Table 15. Ordering Information Scheme

Example: M29F800AB 70 N 1 T

Device Type

M29

Operating Voltage

F = V_{CC} = 5V ± 10%

Device Function

800A = 8Mbit (1Mb x8 or 512Kb x16), Boot Block

Array Matrix

T = Top Boot

B = Bottom Boot

Speed

70 = 70 ns

90 = 90 ns

Package

N = TSOP48: 12 x 20 mm

M = SO44

Temperature Range

1 = 0 to 70 °C

3 = –40 to 125 °C

6 = –40 to 85 °C

Option

T = Tape & Reel Packing

Note: The last two characters of the ordering code may be replaced by a letter code for preprogrammed parts, otherwise devices are shipped from the factory with the memory content erased (to FFFFh).

For a list of available options (Speed, Package, etc...) or for further information on any aspect of this device, please contact the ST Sales Office nearest to you.

Table 16. Revision History

Date	Revision Details
July 1999	First Issue
09/21/99	Removed 55ns speed option I_{CC1} Typ. specification added (Table 10) I_{CC3} Typ. specification added (Table 10)
10/04/99	I_{CC3} Test Condition change (Table 10)
11/12/99	Block Protection and Unprotection paragraph changed
01/14/00	Command Interface paragraph changed

Table 17. TSOP48 - 48 lead Plastic Thin Small Outline, 12 x 20mm, Package Mechanical Data

Symbol	mm			inches		
	Typ	Min	Max	Typ	Min	Max
A			1.20			0.047
A1		0.05	0.15		0.002	0.006
A2		0.95	1.05		0.037	0.041
B		0.17	0.27		0.007	0.011
C		0.10	0.21		0.004	0.008
D		19.80	20.20		0.780	0.795
D1		18.30	18.50		0.720	0.728
E		11.90	12.10		0.469	0.476
e	0.50	–	–	0.020	–	–
L		0.50	0.70		0.020	0.028
α		0°	5°		0°	5°
N	48			48		
CP			0.10			0.004

Figure 11. TSOP48 - 48 lead Plastic Thin Small Outline, 12 x 20mm, Package Outline

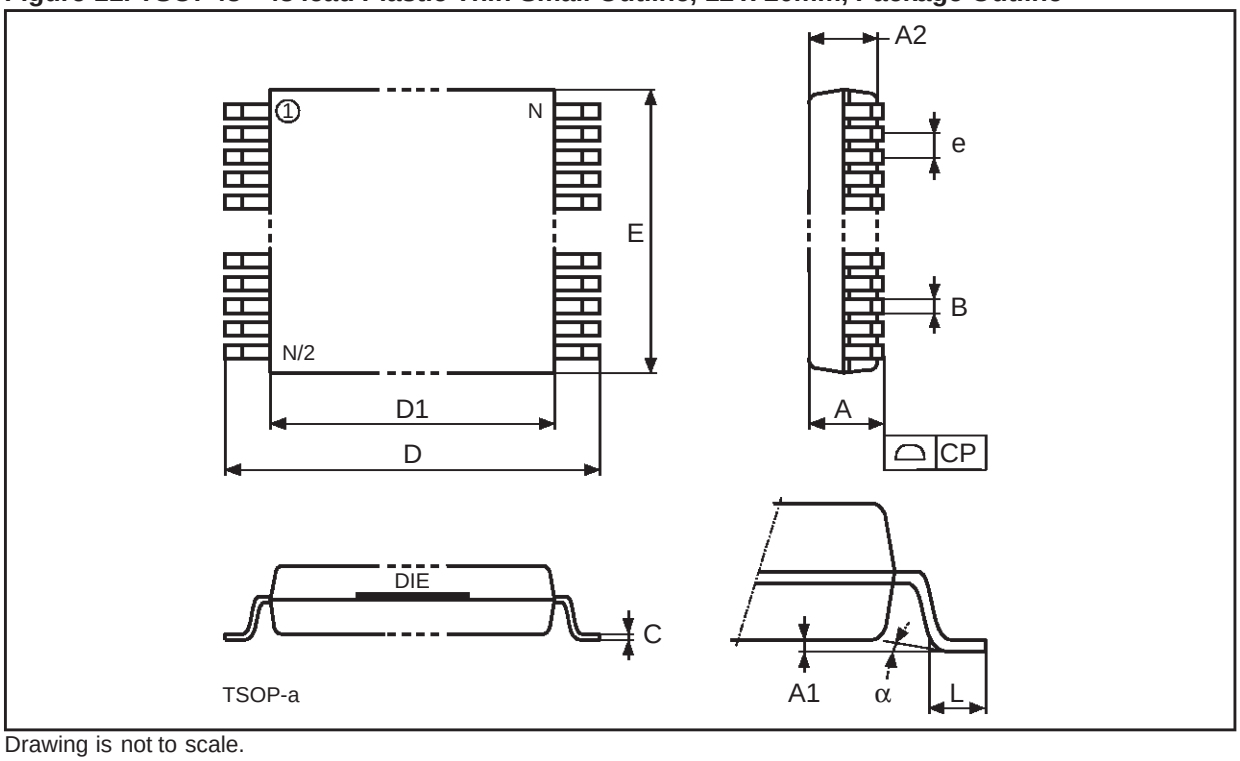

Drawing is not to scale.

Table 18. SO44 - 44 lead Plastic Small Outline, 525 mils body width, Package Mechanical Data

Symbol	mm			inches		
	Typ	Min	Max	Typ	Min	Max
A		2.42	2.62		0.095	0.103
A1		0.22	0.23		0.009	0.010
A2		2.25	2.35		0.089	0.093
B			0.50			0.020
C		0.10	0.25		0.004	0.010
D		28.10	28.30		1.106	1.114
E		13.20	13.40		0.520	0.528
e	1.27	–	–	0.050	–	–
H		15.90	16.10		0.626	0.634
L	0.80	–	–	0.031	–	–
α	3°	–	–	3°	–	–
N	44			44		
CP			0.10			0.004

Figure 12. SO44 - 44 lead Plastic Small Outline, 525 mils body width, Package Outline

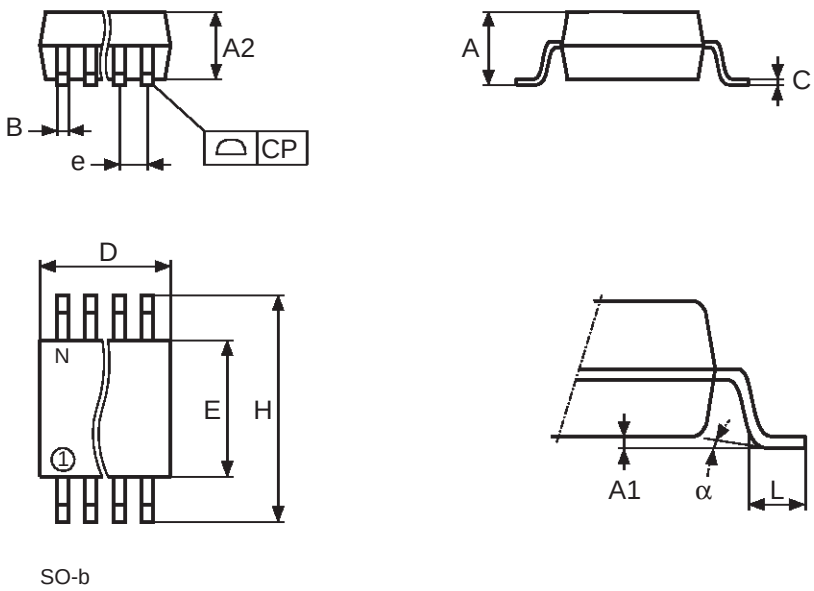

Drawing is not to scale.

Information furnished is believed to be accurate and reliable. However, STMicroelectronics assumes no responsibility for the consequences of use of such information nor for any infringement of patents or other rights of third parties which may result from its use. No license is granted by implication or otherwise under any patent or patent rights of STMicroelectronics. Specifications mentioned in this publication are subject to change without notice. This publication supersedes and replaces all information previously supplied. STMicroelectronics products are not authorized for use as critical components in life support devices or systems without express written approval of STMicroelectronics.

The ST logo is registered trademark of STMicroelectronics
® 2000 STMicroelectronics - All Rights Reserved

All other names are the property of their respective owners.

STMicroelectronics GROUP OF COMPANIES
Australia - Brazil - China - Finland - France - Germany - Hong Kong - India - Italy - Japan - Malaysia - Malta - Morocco - Singapore - Spain - Sweden - Switzerland - United Kingdom - U.S.A.

http://www.st.com